Cassette Car Radio 22RC548 - 578/00

CD Car Radio 22RC668 - 688/00

Service
Service
Service

For repair information of the Cassette deck, see Service Manual No 4822 725 xxxxx of Auto Cassette Deck SCA4-3

For repair information of the CD player, see Service Manual No 4822 725 xxxxx of CD mechanism CDM9-3A

ServiceManual

12 V

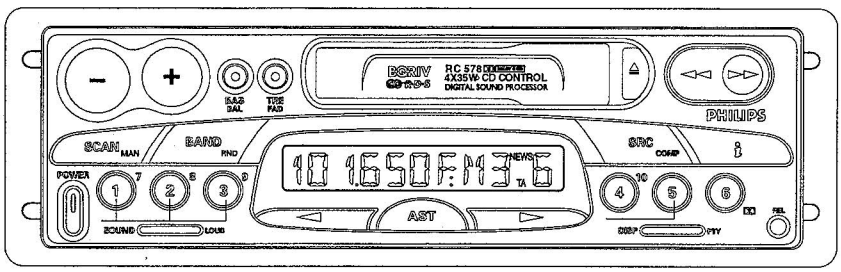

Option

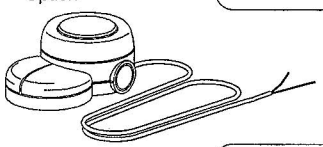

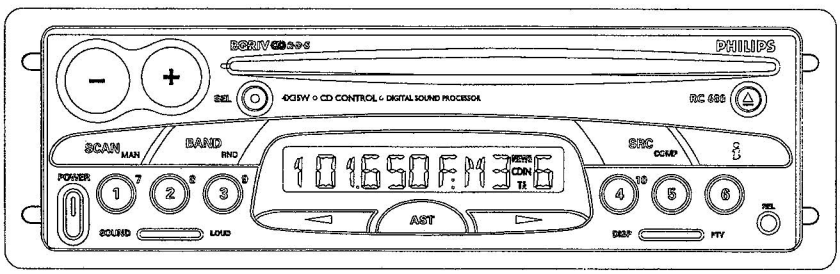

COMPACT disc DIGITAL AUDIO

CLASS 1 LASER PRODUCT

Published by Philips Car Systems Printed in the Netherlands © Copyright reserved Subject to modification 4822 725 24389

PCS 87 714

PHILIPS

Contents **page**

Contents - Remote control	2
Controls and connections	3 - 3a
Wirings - Technical data	4 - 4a
Init mode - Special modes	5 - 5a
Checks and alignments	6 - 6a
Power supply organization - Waveforms	7 - 7a
CDSP description	8 - 8a
CDSP pins description	9 - 9a
Block diagram	10 - 10a
Front schematic diagram	11 - 11a
Front PWB RC548 - 578 (SCA deck)	12 - 12a
Front PWB RC668 - 688 (CD)	13 - 13a
IC96 module description	14
Tuner part schematic diagram	14a
Power supply part 00 schematic diagram	15 - 15a
Power supply part 01 schematic diagram	16 - 16a
Power supply part 02 schematic diagram	17 - 17a
Power supply part 03 schematic diagram	18 - 18a
Main PWB - Top side view	19 - 19a
Sound process part 00 schematic diagram	20 - 20a
Sound process part 01 schematic diagram	21 - 21a
Microcontroller part 00 schematic diagram	22 - 22a
Microcontroller part 00 DC voltages	23
Microcontroller part 01 IC pinnings	24
Microcontroller part 01 schematic diagram	25 - 25a
Microcontroller part 02 schematic diagram	26 - 26a
Tape part schematic diagram	27 - 27a
Main PWB layout - Bottom view	28 - 28a
Power amplifier part schematic diagram	29 - 29a
Exploded view RC548 - 478	30 - 30a
Mechanical partslist - Opening the front	31 - 32
Exploded view RC668 - 688	33 - 33a
Main PWB Electrical partslist	34 - 34a - 35 - 35a - 36
Det front PWB electrical partslist	36a
Technician remarks	37

REMOTE CONTROL

This set can be controlled also by a remote control allowing you to carry out some of the main functions of the set.

See the drawing below:

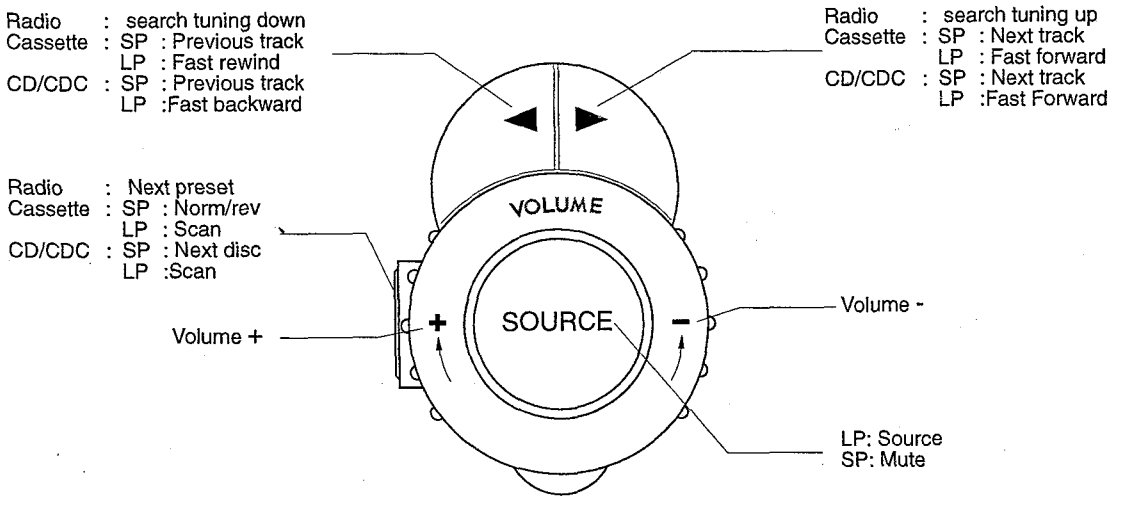

22RC548/00
22RC578/00
22RC668/00
22RC688/00

Commands

RC548/578

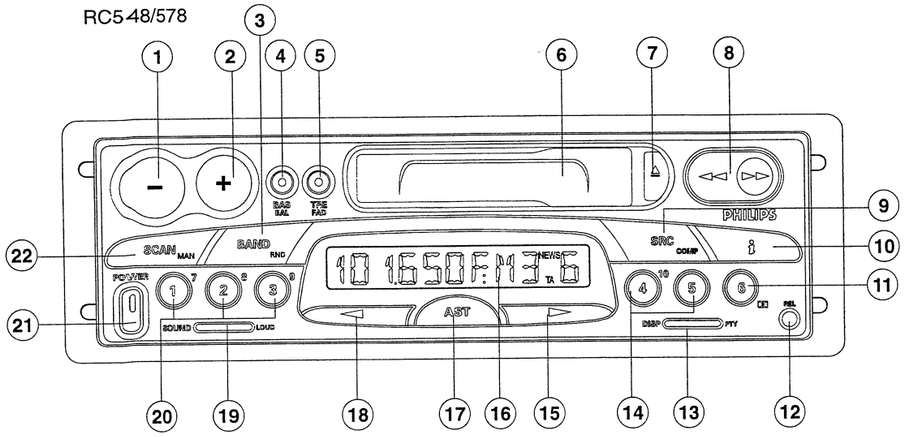

RC668/688

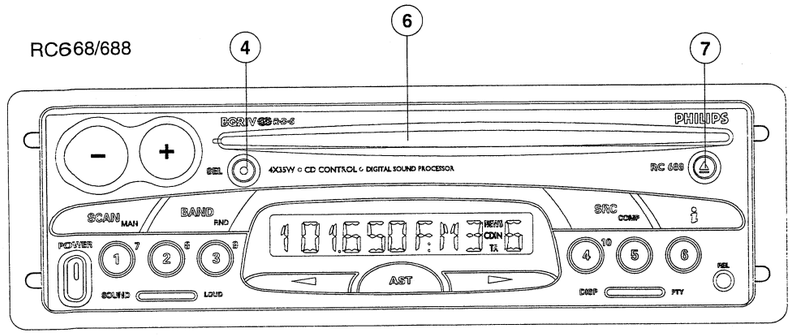

POS	RC548/00	RC578/00	RC668/00	RC688/00
1	VOL -			
2	VOL +			
3	Selection band	Selection band / Random		
4	Bass / Bal		Audio Selection	
5	Treb / Fad			
6	Cassette opening		CD opening	
7	Reverse / eject cassette		Disk eject	
8	FRW / FFW button			
9	Source selection		Source selection / compression	
10	Traffic information / News			
11	Preset 6 / Dolby		Preset 6	
12	Release button for detachable unit			
13	Display / Program type selection			
14	Preset 4, 5	Preset 4,5 / CDC sel n° 10	Preset 4, 5	Preset 4,5 / CDC sel n° 10
15	Search UP	Search UP / Track UP		
16	Display			
17	Autostore			
18	Search DOWN	Search DOWN / Track DOWN		
19	Sound / Loudness			
20	Preset 1, 2, 3	Preset 1, 2, 3 CDC sel n° 7, 8, 9	Preset 1, 2, 3	Preset 1, 2, 3 CDC sel n° 7, 8, 9
21	ON / OFF			
22	Scan frequency / Manual search selection	Scan frequency / Scan track Manual search selection		

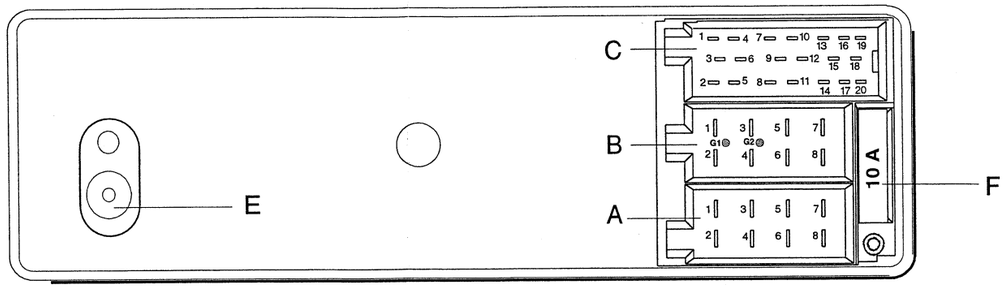

POS	FUNCTION	RC548/00	RC578/00	RC668/00	RC688/00
A1	Phone mute	X	X	X	X
A2	Remote GND	X	X	X	X
A3	Remote Input	X	X	X	X
A4	Plus accessories or permanent	X	X	X	X
A5	+ Antenna	X	X	X	X
A6	Pilot light	X	X	X	X
A7	Plus permanent or accessories	X	X	X	X
A8	GND	X	X	X	X
B1	Rear right +	X	X	X	X
B2	Rear right -	X	X	X	X
B3	Front right +	X	X	X	X
B4	Front right -	X	X	X	X
B5	Front left +	X	X	X	X
B6	Front left -	X	X	X	X
B7	Rear left +	X	X	X	X
B8	Rear left -	X	X	X	X
G1	Gateway (I2C bus access)	X	X	X	X
G2	Gateway (I2C bus access)	X	X	X	X
C1	Line out RL		X	X	X
C2	Line out RR		X	X	X
C3	Line out GND		X	X	X
C4	Line out FL		X	X	X
C5	Line out FR		X	X	X
C6	+ Switched		X	X	X
C13	Bus D2B +		X		X
C14	Bus D2B -		X		X
C15	Bus GND		X		X
C16	+ Permanent		X		X
C17	+ Switched		X		X
C18	Input reference		X		X
C19	Input left		X		X
C20	Input right		X		X
E	AERIAL PLUG	SLIDE IN			
F	FUSE	10A			

22RC548/00
22RC578/00
22RC668/00
22RC688/00

Normal power supply connection

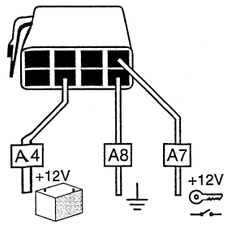

Power supply connection for ON-OFF LOGIC

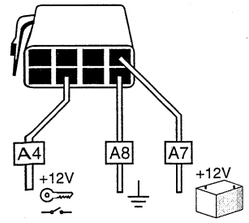

Remote control (option)

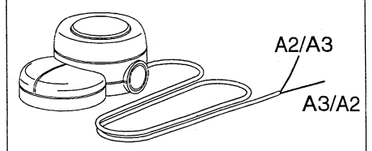

4X30W

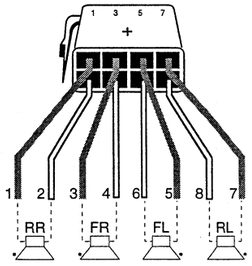

HANDLING CHIP COMPONENTS

GENERAL

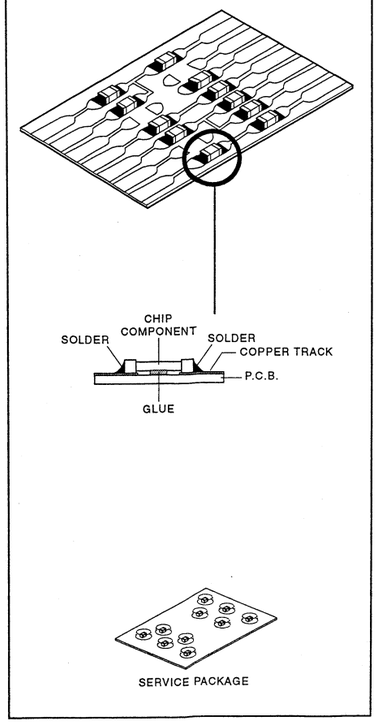

DISMOUNTING

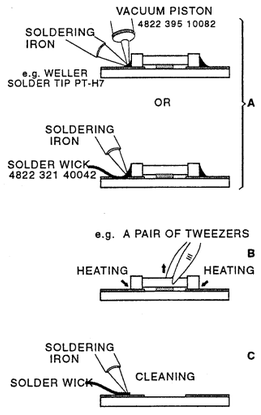

PRECAUTIONS

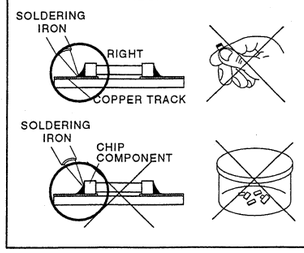

MOUNTING

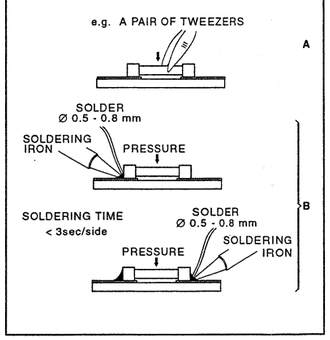

EXAMPLES

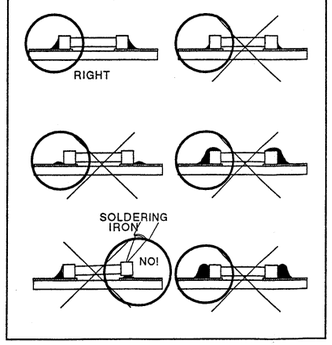

TECHNICAL DATA

GENERAL

Power supply	:10 to 16V DC
Dimensions	:180x160x51 mm
Front	: Full etachable
Security code	: No
Blinking LED	: Yes
Quiescent current (at 12.6V)	: <3mA (with clock and blinking LED)
Illumination color	: Orange / Green

RADIO

LW	: 144-288 KHz - steps Manual / Search : 1 KHz
MW (Europe)	: 531-1629 KHz - steps Manual / Search : 1 / 9 KHz
MW (USA)	: 530-1710 KHz - steps Manual / Search : 1 / 10 KHz
SW	: 5.95-6.25 MHz - steps Manual / Search : 1 KHz
FM (x3)	: 87.5-108 MHz - steps Manual / Search : 50 / 100 KHz
IF-AM (1/2)	: 10.7 MHz / 450 KHz
IF-FM (1/2)	: 72.2 MHz / 10.7 MHz
Sensivity 26dB S/N	: 38 µV (LW)
	: 30 µV (MW)
	: 25 µV (SW)
	: 4 µV (FM)
Limitation α-3dB	: 5 to 20 µV

CASSETTE

Cassette mechanism	: SCA4.3/H
Number of tracks	: 2x2
Tape speed	: 4.76 cm/sec
Wow and flutter	: < 0.30%
Crosstalk	: > 45dB

CD (only RC668/688)

CD mechanism	: CDM9-3A
Frequency response	: 30 - 16000Hz
Crosstalk L-R at 1KHz	: >30 dB

AMPLIFIER

Output power	: 4x19W / 4Ω (THD = 10%)
Treble control	: +10 / -10 at 10kHz
Bass control	: +12 / -12 at 80Hz
Balance control	: 70dB
Fader	: 70dB

ESD

WARNING

All ICs and many other semi-conductors are susceptible to electrostatic discharges (ESD). Careless handling during repair can reduce life drastically.
When repairing, make sure that you are connected with the same potential as the mass of the set via a wrist wrap with resistance.
Keep components and tools also at this potential.

ESD equipment available:

Anti-static table mat large 100X650X1.25mm	4822 466 10953
small 600X650X1.25mm	4822 466 10958
Connection box (1Mohm)	4822 395 10223
Extendible cable (to connect wrist band to connection box)	4822 320 11307
Connecting cable (to connect table mat to connection box)	4822 320 11305
Earth cable (to connect any product to mat or box)	4822 320 11308
Complete kit ESD3 (combining all above products)	4822 310 10671
wristband tester	4822 344 13999

22RC548/00
22RC578/00
22RC668/00
22RC688/00

INIT MODE:
The customer may have modified some settings with the Init Mode.

Entering the Init Mode:
Switch ON the set. Press the BAND key for at least 2 seconds, until you hear a beep.
The display shows "INITIAL".
Press the ◄ or ► key one or more times until the option you want to modify is displayed.
Briefly press the AST key one or more times to adjust the choice.
- The choice shown on the display will be memorized by the set when you select another option or leave the "INIT" mode.
Press the BAND key for at least 2 seconds to leave the "INIT" mode.
Note: the set automatically leaves the "INIT" mode about 1 minute after your last operation.

List of "INIT" options: (Initial factory settings shown in **bold**).

Option ◄ or ►	Choice (AST)	Usage
SRCH	**DX**, LO	Select LO if you wish to search only for strong stations during automatic tuning to a frequency.
SRC	**CDC**, AUX	Source connected to connector C3: - Select CDC for a Philips CD Changer (D2B type); - Select AUX for a portable audio player.
CD	-4 -3 -3 -1 **0** +1 +2 +3 +4	Volume level of CD relative to tuner.
CDC or AUX	-4 -3 -3 -1 **0** +1 +2 +3 +4	Volume level of CD changer or AUX input relative to tuner.
TA	-4 -3 -3 -1 **0** +1 +2 +3 +4	Volume level of Traffic Announcements, News bulletins and Alarm messages relative to tuner.
VIEW	-1 **0** +1	Select the viewing angle of the set's display.
COLOUR	**G** O	Select the desired display colour: Green or Orange.
LOUD B	1 **2** 3	Select the level of correction for the low notes (Bass).
LOUD T	0 1 **2** 3	Select the level of correction for the high notes (Treble).
PHONE	**NO** LO HI	Select LO or HI according to phone (LO in most cases). Select NO if no phone connected.
BP TYP	1 2 **3** 4	Select type of confirmation beeps.
BP LEV	1 2 **3** 4 5	Select volume of confirmation beeps (useful if external amplifier is connected).
LW	OFF **ON**	Select OFF to suppress LW band if it is not used.
MW	OFF **ON**	Select OFF to suppress MW band if it is not used.
SW	OFF **ON**	Select OFF to suppress SW band if it is not used.
TUN	**EURO** AMER	Select the tuner according to European or American standards.
TIME	12 H **24 H**	Select desired clock format.
CLKRDS	**N** Y	Select Y if you want the time to be updated automatically. *The transmitted time via RDS can be incorrect*
LOGI	OFF **ON**	Select ON to limit the use of the set to one hour, when the car ignition is switched off.
COMP	1 **2** 3	Select 1 to maintain the peaks in the volume. Select 3 to level out the volume.
BASS	40 **80**	Select average frequency of the low notes.
TREB	**5K** 7K	Select average frequency of the high notes.
SCAN	5 **10** 15	select how many seconds the set scans one station or track.
REG	OFF ON **AUTO**	Select ON to maintain the regional programme. Select OFF to directly switch to the programme of the next region. AUTO only switches when the next signal is stronger.
LED	OFF **ON**	Select OFF if you do not want the LED to blink when the front is removed.

DEMO MODE (or Dealer Mode)

In this mode, the display shows in sequence the main features of the set.

Activating the Demo mode:
While keeping the preset 1 and preset 5 keys pressed, switch On the set.
The set remains in this mode even if you switch the set OFF and ON again.
To quit the Demo mode, follow exactly the same procedure as "Activating the Demo mode".

TEST MODES:

1) Display test
This test is called by pressing simultaneously presets 1 and 6 keys (set On).
The display shows in sequence: all segments lit
the internal factory code of the microprocessor
the software release number. It is for these sets **1.04** or **1.05**, until further notice.
To quit this mode, switch Off the set .

2) Keyboard test
This test is called by switching the set On while keeping pressed the preset 3 key. The display shows: T - -
Then press each key at least one time. A different number will appear each time you press a new key (e.g. T 0 1).
When all the keys are pressed, if all is correct, the display shows MOUSE.
Activate the [Vol -] command of the mouse. The display shows all segments lit. The test is now finished.
This test can be exited at any moment by switching Off the set.

3) Field test
This test is called by pressing simultaneously presets 2 and 4 keys (set On).
The display shows:
4 digits indicating the tuned frequency
5th digit: Level 0..F (F = best fieldstrength)
6th digit: Multipath 0..F (0 = no multipath)
7th digit: Noise 0..F (0 = no noise)
8th digit: Suppression counter (0 = no necessity to switch to another station)
This test can be exited by switching Off the set or by pressing again presets keys 2 and 4 at the same time.

4) Loudspeakers installation test (Only on software version 1.05)
This test is called by pressing simultaneously keys SCAN and i
The display shows in sequence FRONT L - FRONT R - REAR R - REAR L while the corresponding loudspeaker beeps 5 times.
This test is exited by switching Off the set.

EEPROM
Several values and adjustments are stored in the EEprom. The EEproms available in Service are filled with mean values.

22RC548/00
22RC578/00
22RC668/00
22RC688/00

Check and Alignment

For all measurements, please refer to the manual "General Check & Alignment procedures for Car Systems" 4822 725 25456, unless otherwise stated

Current and voltage

1) SET OFF

SET OFF	Voltage	Current +Acc ON	Current +Acc OFF	Supply mP pin 14 7513	V_LOW pin 34 7513
Acc Supply	+12.6V	< 3mA		min 4.8V max 5.2V	max 0.8V
Perm Supply	+12.6V	< 3mA	<3 mA		

2) SET ON

Reset pin 30	Supply mP pin 14 7513		V_LOW pin 34 7513		5V pin3 L7805 ABV		8.5V pin 3 L4885CV		V EEprom	
max 0.8V	min 4.8	max 5.2	min 2	max 5.7	min 4.8	max 5.2	min 8.2	max 8.8	min 4.8	max 5.2

Reference oscillator frequencies (to be measured via a X10 probe)

device	MSM 6307	83CE558	HEF4521	SAA7701
pin	24 & 25	51 & 52	4 & 6	63 & 64
frequency	6 MHz 0.5%	16 MHz 0.5%	4.194304 MHz 20 ppm	36.860 MHz 60 ppm

Checks:
1) FM

FM mute	98 MHz 1mV	output at load resistor R & L = 775 mV = REF
	no signal	output should be < -24 dB (REF - 24 dB)

Demodulated FM level	98 MHz	215 mV 2dB
	Input	MPX Output of IC96 (pin 10)

Limiting point α-3dB	FM 98MHz	FM	6µV	3µV	14µV
	RANGE	INPUT	NOMINAL	MIN	MAX

Search levels	Input	Dx: 10µV < X < 20µV
	98 MHz	Local : 190µV < X < 290µV

2) AM

Demodulated AM level	1053KHz - m=30% - 1KHz	230 mV 2dB
	Input	Audio output of IC96 (pin 19)

Sensivity at 26dB S/N	162KHz	m = 30%	400Hz	< 38µV
	1053KHz			< 30µV
	6100KHz			<25µV

Search levels	Input	Dx: 7µV < X < 21µV
	1053KHz	Local : 35µV < X < 105µV

No alignment is needed for radio part. The tuner module IC96 is pre-aligned in the factory.
Dolby alignment, crosstalk alignment and FM DC level curve learning procedure are performed via a special equipment and software, not yet available in Service.
Some values are stored in the EEprom.
The EEprom available in service will contain mean values, that could affect slightly the performance of the set. It is the only solution until further notice. The service code of this EEprom will be given in a next Service Newsletter.
If you change the tuner module, change also the EEprom.

Deck part (for RC548/578)
Use test cassette SBC420 4822 397 30071 unless otherwise stated.

Tape speed and flutter: Use 3.15KHz test tone	Supply voltage	Tape speed	Flutter
	10.8 - 15.6 V	4.76cm/s 2%	< 0.3%

Crosstalk : use 1KHz 0dB crosstalk signal	< -35dB at speakers output R & L

CD part (for RC668/688)

Test CD	Test	Result
Eccent-music 150um 4822 397 30279	Insert disk and play track 01	No failure
Vertical deviation 4822 397 30282	Check loading, display of number of tracks and total time. Select track no 9 time 00.20 listen to the disk during 4 seconds	no electrical nor mechanical noise

Test CD	Test		Result
Audio signal disk 1 4822 397 30184	Compression Off	Crosstalk track 67 and 71	Crosstalk < -65dB
	Compression On		Crosstalk < -60dB (comp 1 by default)

Signal to noise ratio

A weighted filter, track 1 versus track 49 of disk 1	
Compression Off	S / N > 80dB
Compression On (default 1)	S / N > 70dB

22RC548/00
22RC578/00
22RC668/00
22RC688/00

POWER SUPPLY ORGANIZATION

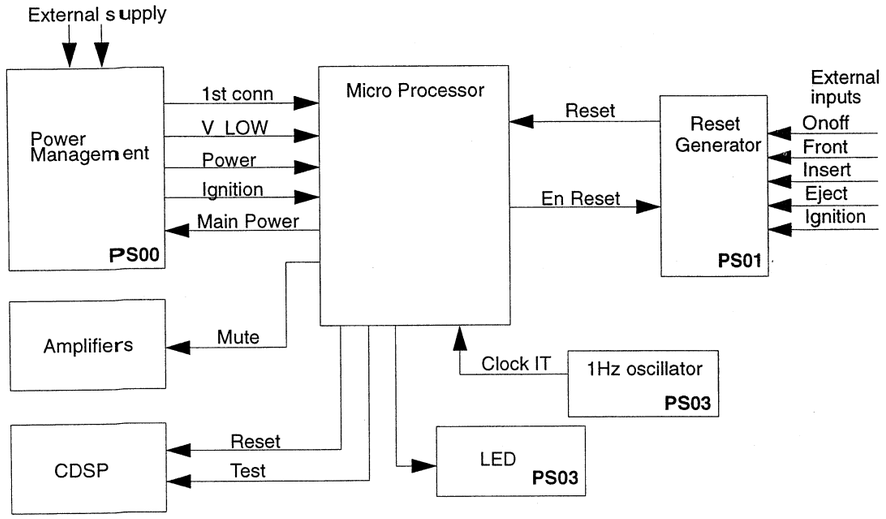

Short explanation

The reset is generated after a user action by the reset generator. Its task is to generate resets to the micro p. at input change and at power recovery (when V_LOW (pin 14 7403) is high again) only when EnReset (pin 12 7402) input is low.
If EnReset is high, no resets are expected (set is ON).
The Power Management device gives information about supply to the micro p. and provides two digital outputs (1st conn, V_LOW (pin 11 7401)), two analog outputs (Power, Ignition) and one digital input (Main Power).
The 1st connection information is a fugitive information (around 100ms, available on RESET_uC) which is memorized by the micro p. and leads to first connection actions such as RAM clear. The V_LOW output is connected to an interrupt and goes LOW when power is falling under 8V (in fact 7.9 to 9.8V, due to spread of components). It goes high again when power comes back.
Power and Ignition analog outputs are provided to enable the micro p. to measure both supply voltages.
Main power is an input that turns On and Off the power on the board.
Mute, reset and test output pins of the micro p. are performing actions on amplifiers and CDSP while the one hertz oscillator allows to update internal system clock.

1) Reset at first connection

At the first connection of the set to supplies, a "Power-on-reset" (1st_PWR_ON) will be generated via regulator L4949. This hardware reset is active till the 5V for the micro p. is stable.

2) Reset by input lines while set is OFF

The set is awaken by the an hardware reset while the micro p. is in OFF state (power down mode). Several inputs can generate the reset.

- ❒ Ignition key
- ❒ OnOff key
- ❒ Tape / CD insert
- ❒ Tape / CD eject
- ❒ Low voltage (V_LOW) - transition low to high voltage
- ❒ Front detection

Via the different interface the inputs are connected to one of the two inputs of the reset circuitry (Pin 4 or 11 of 7402)
With a transition on any of the input lines, a 1ms duration reset (RESET_uC in schematic PS01) is generated, which leads to wake up the micro p. from the power down mode. At the same time, the reset will be disabled. The micro p. is then able to check the reset origin and to decide at least if the set must switch on or not.

Waveforms on IC 7401 L4949N

1) Set OFF

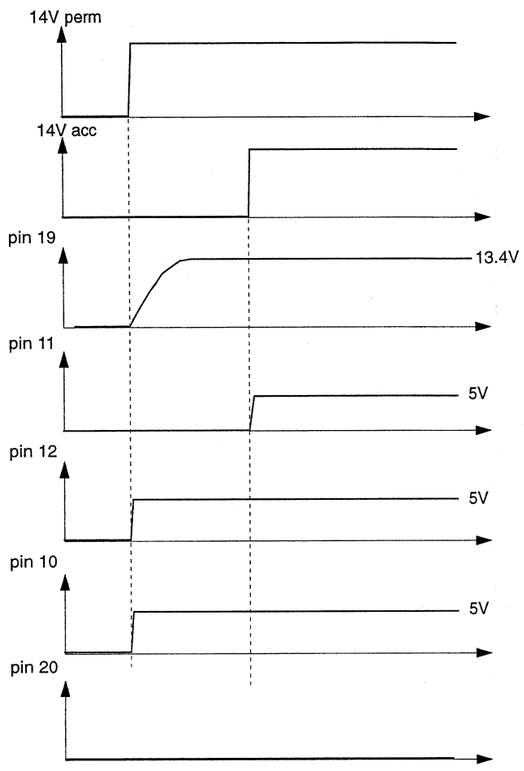

2) Set ON

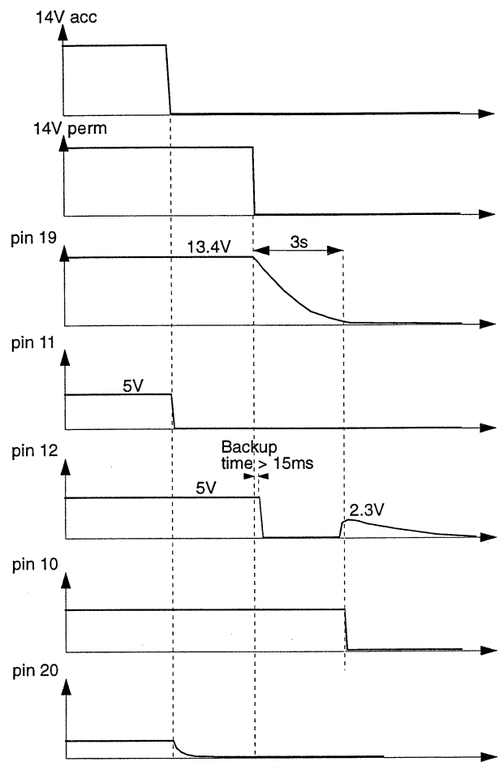

3) V_LOW handling

If a V_LOW occurs during set is On or during set On/Off procedure is performed, the micro p. switches Off the set and finishes the write EEprom activities.After this actin the hardware reset generation will be enabled and the micro p. goes to power down.

V_LOW handling

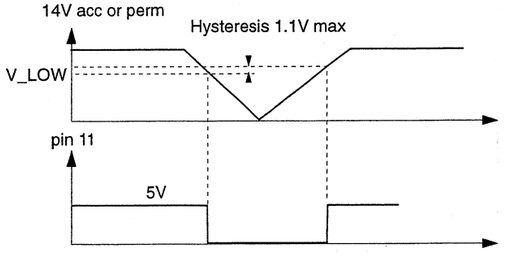

Case ① The set is On, the permanent supply falls down but is over 4.7V

Case ② The set is On, the permanent supply falls down below 4.7V for longer than backup time

Behaviour while engine start

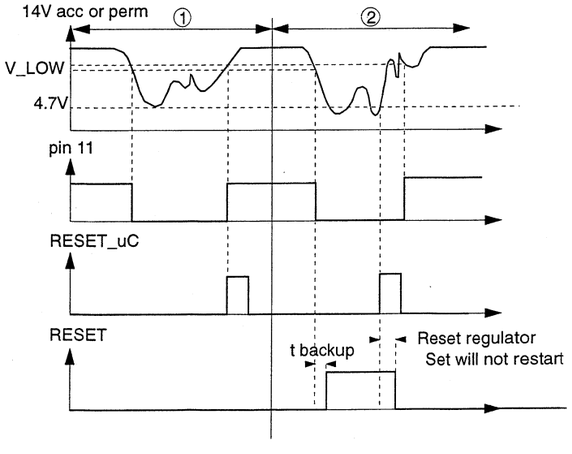

DESCRIPTION OF THE CAR DIGITAL SIGNAL PROCESSOR (CDSP) SAA7701

The CDSP chip can perform all the signal functions in front of the power amplifier and behind the AM and FM demodulation and tape input. These functions are: interference absorption, stereo decoding, RDS decoding, weak signal processing (soft-mute, sliding stereo, etc...), Dolby-B tape noise reduction and the audio volume controls (volume, balance, fader, tone, dynamic compression). Some functions have been implemented in hardware and are not freely programmable. Digital audio signals from external sources with I2S format are accepted.There are four independent analog output channels. This enables separate tone and equalisation control for front and rear speakers.
The DSP can contain a basic program which enables already a set with AM/FM reception, sophisticated FM weak signal functions, MSS, Dolby-B tape noise reduction system, CD play with compressor function, separate bass and treble tone control and fader/balance control.

Hardware features

- Bit stream 3rd order Sigma-Delta A/D converters with anti alliasing broadband input filters
- D/A converters with four over sampling and noise shaping
- Digital stereo decoder
- Improved, digital IAC
- RDS processing with optional 16 bit buffer via separate channel (two tuner radio possible)
- Auxiliary analog CD input (CD-walkman, speech, economic CD-changer etc...)
- Two separate full I2S CD and DCC high performance interfaces
- Expandable with additional DSPs for sophisticated features through an I2S gateway
- Audio output short circuit protected
- I2C bus controlled
- Analog tape input
- -40 to +85° C operating temperature range

Software features

- Improved FM weak signal processing with more stereo
- Integrated 19KHz MPX filter and de-emphasis
- Electronic adjustments: FM/AM level, FM channel separation, Dolby level
- Baseband audio processing (treble/bass/balance/fader/volume)
- Dynamic loudness or bass boost
- Stereo 1 or 3 band parametric equaliser
- Automatic leveller (in combination with microprocessor)
- Tape equalisation (DCC analog playback)
- Music Search detection for tape (MSS)
- Pause detection for RDS updates
- Dolby-B tape noise reduction
- (adjustable) dynamic compressor
- CD/DCC De-emphasis processing
- Signal level, noise and multipath detection for RDS (I2C bus command)
- Hidden mute during RDS updates
- Improved AM reception

BLOCK DIAGRAM

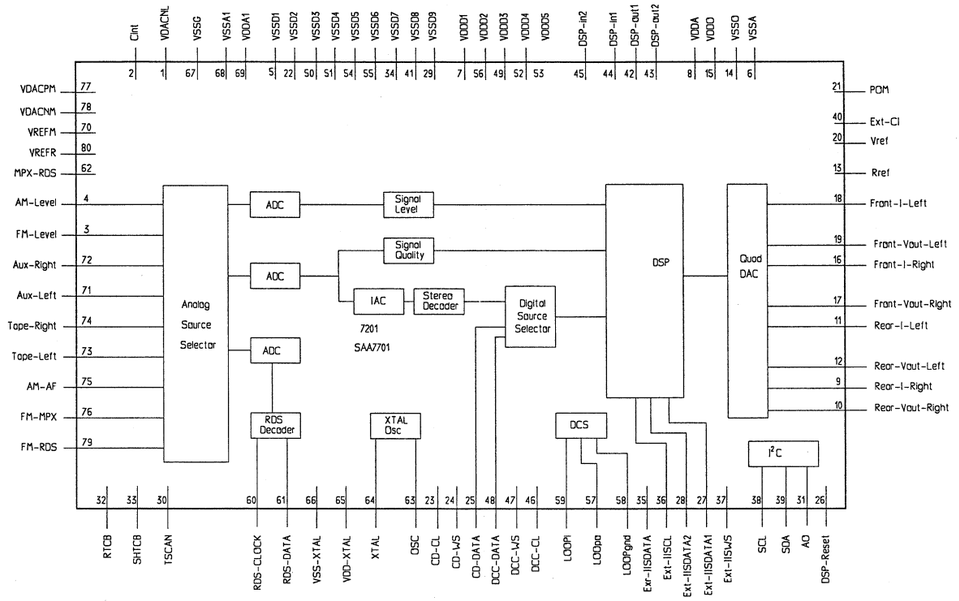

FUNCTIONAL DESCRIPTION

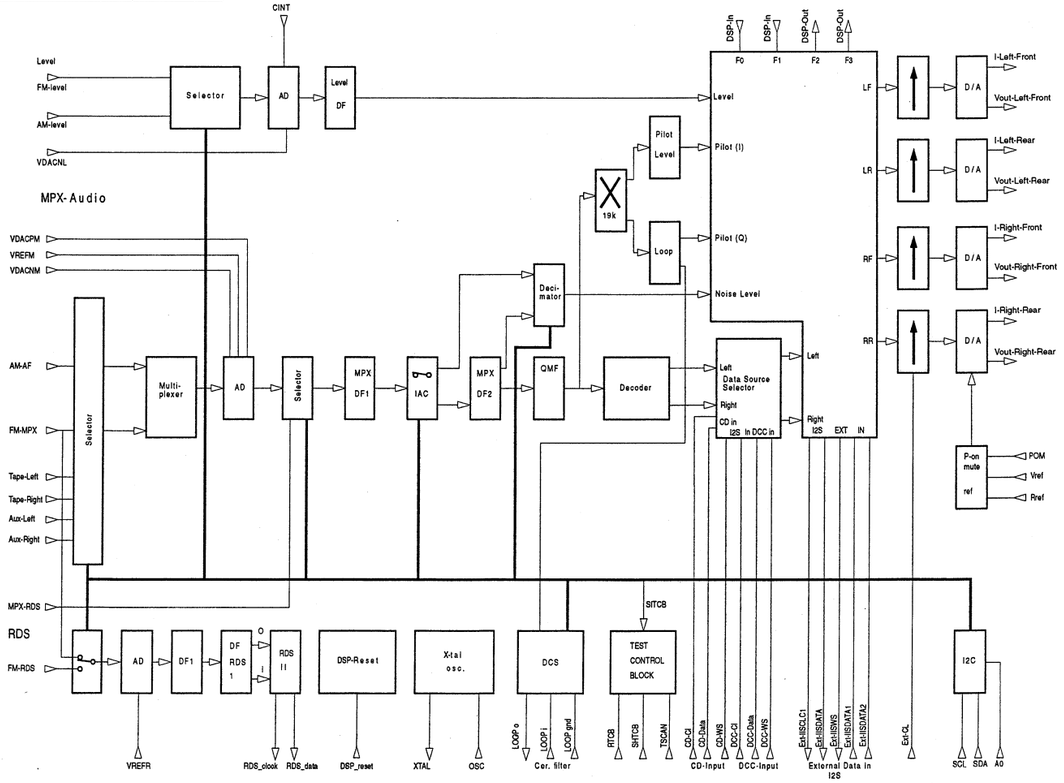

.PINNING OF THE CDSP SAA7701

SYMBOL	PIN	DESCRIPTION
VDACNL	1	Ground Reference Level AD DAC LEVEL
CINT	2	Level AD switch mode integrator connection
FM-level	3	FM-level input pin. Via this pin the level of the received FM-radio signal is fed to the CDSP. The level information is needed for a correct functioning of the weak signal behaviour.
AM-level	4	AM-level input pin. Via this pin the level of the received AM-radio signal is fed to the CDSP.
VSSD1	5	Supply ground 1 digital circuitry DACs
VSSA	6	Supply ground analog circuitry DACs
VDDD1	7	Positive supply 1 digital circuitry DACs
VDDA	8	Positive supply analog circuitry DACs
Rear-I-Right	9	Analog audio current output for Rear-right speaker
Rear-Vout-Right	10	Analog audio voltage output for Rear-right speaker
Rear-I-Left	11	Analog audio current output for Rear-left speaker
Rear-Vout-Left	12	Analog audio voltage output for Rear-left speaker
Rref	13	Input for the internal reference current source of the D/A converter
VSSO	14	Supply ground for output Op-amps DAC
VDDO	15	Positive supply for output Op-amps DAC
Front-I-Right	16	Analog audio current output for Front-right speaker
Front-Vout-Right	17	Analog audio voltage output for Front-right speaker
Front-I-Left	18	Analog audio current output for Front-left speaker
Front-Vout-left	19	Analog audio voltage output for Front-left speaker
Vref	20	Voltage input for the internal reference buffer amplifier of the D/A converter.
POM	21	Activates the Power On Mute. Timing is determined with an external capacitor.
VSSD2	22	Ground supply 2 digital circuitry
CD-CI	23	I^2S Clock input CD digital audio source. Also reference for 4* asf and asf. Selected if DIV-EXT/INT is not set. / Output LIRS scan chain 6
CD-WS	24	I^2S Word Select Input CD digital audio source / Input LIRS scan chain 6
CD-Data	25	I^2S Left/Right Data Input CD digital audio source / Input LIRS scan chain 1
DSP-reset	26	Input to reset DSP-core (active low) / input LIRS scan chain 3
Ext_IISDATA1	27	I^2S External Input Data channel 1 (front) from extra DSP chip / input CORE scan chain DIO
Ext_IISDATA2	28	I^2S External Input Data channel 2 (rear) for extra DSP chip
VSSD9	29	Ground supply 9 digital circuitry
TSCAN	30	Scan control (active high)
A0	31	Slave sub-address I^2C selection / Serial data input test control block (SITCB)
RTCB	32	Asynchronous Reset test control block (active high)
SHTCB	33	Shift clock test control block (active high)
VSSD7	34	Ground supply 7 digital circuitry
Ext_IISDATA	35	I^2S External Output Data for extra DSP chip / output LIRS scan chain 4; controlled by ENA_IIS (bit 13)
Ext_IISCL	36	I^2S External Output Clock for extra DSP chip / output LIRS scan chain 3; controlled by ENA_IIS (bit 13)
Ext_IISWS	37	I^2S External input/output Word select for extra DSP chip / output CORE scan chain DIO; controlled by ENA_IIS (bit 13)
SCL	38	Serial clock input (I^2C bus) / input LIRS scan chain 4
SDA	39	Serial data input/output (I^2C bus)
EXT-CI	40	External reference clock input to generate 4*asf and ASF synchronisation. To be used in case the I^2S clock inputs are not suitable. Selection if DIV-EXT/INT is set / Latch signal DAC data words in analog test mode.
VSSD8	41	Ground supply 8 digital circuitry
DSP_out1	42	Digital output 1 from DSP-core (F2 of status register) / output CORE scan chain (tri-state for Debug board)
DSP_out2	43	Digital output 2 from DSP-core (F3 of status register) / IAC trigger output / output DAC scan chain 1; actived by AGC_TRIG (bit 15)

SYMBOL	PIN	DESCRIPTION
DSP_in1	44	Digital input 1 for DSP-core (F0 of status register) / input LIRS scan chain 2
DSP_in2	45	Digital input 2 for DSP-core (F1 of status register) / input CORE scan chain
DCC-CI	46	I^2S Clock input DCC digital audio source. Also reference for 4*asf and asf. Selected if DIV-EXT/INT is not set. / Input DAC digital scan chain 1 / input DAC analog scan chain LEFT / input external MPX ADC if SEL-EXT/ADC is set.
DCC-WS	47	I^2S Word Select input DCC digital audio source / input DAC digital scan chain 2 / input DAC analog scan chain RIGHT / input external RDS ADC if SEL-EXT/ADC is set.
DCC-Data	48	I^2S Left/RIGHT Data input DCC digital audio source / output LIRS scan chain 5 / input external LEVEL ADC if SEL-EXT/ADC is set.
VDDD3	49	Positive supply 3 digital circuitry
VSSD3	50	Ground supply 3 digital circuitry
VSSD4	51	Ground supply 4 digital circuitry
VDDD4	52	Positive supply 4 digital circuitry
VDDD5	53	Positive supply 5 digital circuitry
VSSD5	54	Ground supply 5 digital circuitry
VSSD6	55	Ground supply 6 digital circuitry
VDDD2	56	Positive supply 2 digital circuitry
LOOPo	57	Unfiltered DCS clock output / output DAC scan chain 2 / LEVEL A/D bitstream output in analog A/D test mode / bit slicer output in slicer test mode
LOOPgnd	58	Ground connection DCS filter
LOOPi	59	Filtered DCS clock input / Bit slicer input in slicer test mode
RDS-Clock	60	Radio Data System bit clock output / output LIRS scan chain 1 / MPX A/D bitstream output in analog AD test mode / RDS external clock input; controlled by SEL-BUF/BUF (bit 7) / X-tal output in slicer test mode.
RDS-Data	61	Radio Data System data output / output LIRS scan chain 2 / RDS A/D bitstream output in analog AD test mode
MPX-RDS	62	Selects in FM-mode between FM-MPX and RDS-MPX input signal to the MPX decimation filter / input LIRS scan chain 5 / input A/D scan chain in analog test mode
OSC	63	Crystal oscillator output: Drive output to 36.860 MHz crystal or forced input in slave mode
XTAL	64	Crystal oscillator input: local crystal oscillator sense
VDD_XTAL	65	Positive supply X-TAL circuitry
VSS_XTAL	66	Ground supply X-TAL circuitry
VSSG	67	Ground guards ADs
VSSA1	68	Ground supply ADs analog
VDDA1	69	Positive supply ADs analog
VREFM	70	Mid ref voltage MPX AD and buffers
Aux-Left	71	Analog input pin for Auxiliary-Left signal
Aux-Right	72	Analog input pin for Auxiliary-Right signal
Tape-Left	73	Analog input pin for Tape-Left signal
Tape-Right	74	Analog input pin for Tape-Right signal
AM-AF	75	Analog input pin for AM audio frequency
FM-MPX	76	Analog input pin for FM-Multiplex signal
VDACPM	77	Positive reference voltage AD DAC MPX and RDS
VDACNM	78	Ground reference voltage AD DAC MPX and RDS
FM-RDS	79	Analog FM-MPX input pin for RDS decoding
VREFR	80	Mid ref voltage RDS AD, LEVEL AD and buffers

Explanation: LIRS is the abbreviation of the level, IAC, RDS and Stereo decoder part.

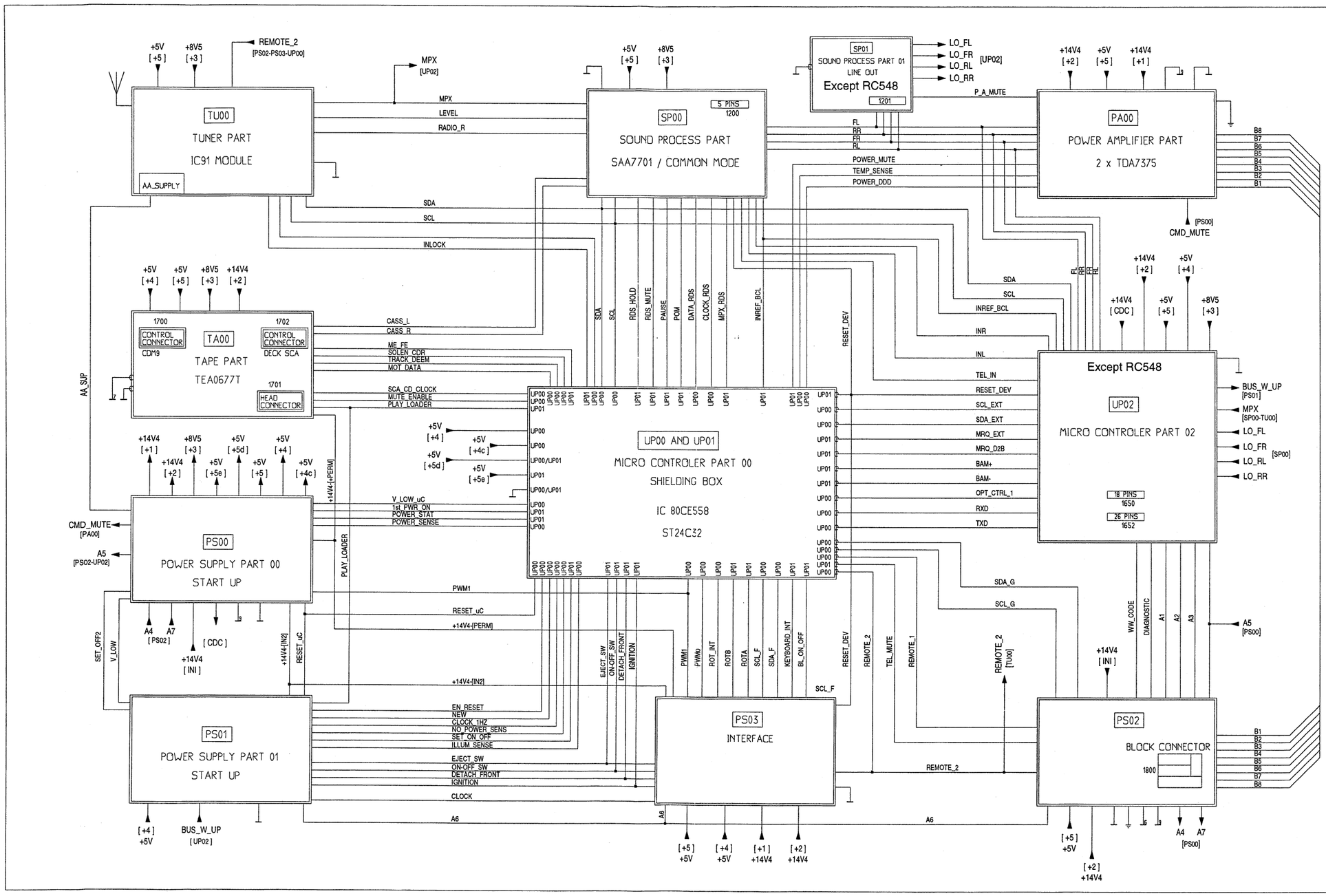

ELECTRICAL BLOC DIAGRAM

22DC548/00
22DC578/00
22DC668/00
22DC688/00

IN BLUE: COMPONENTS FOR 22RC668/688 ONLY

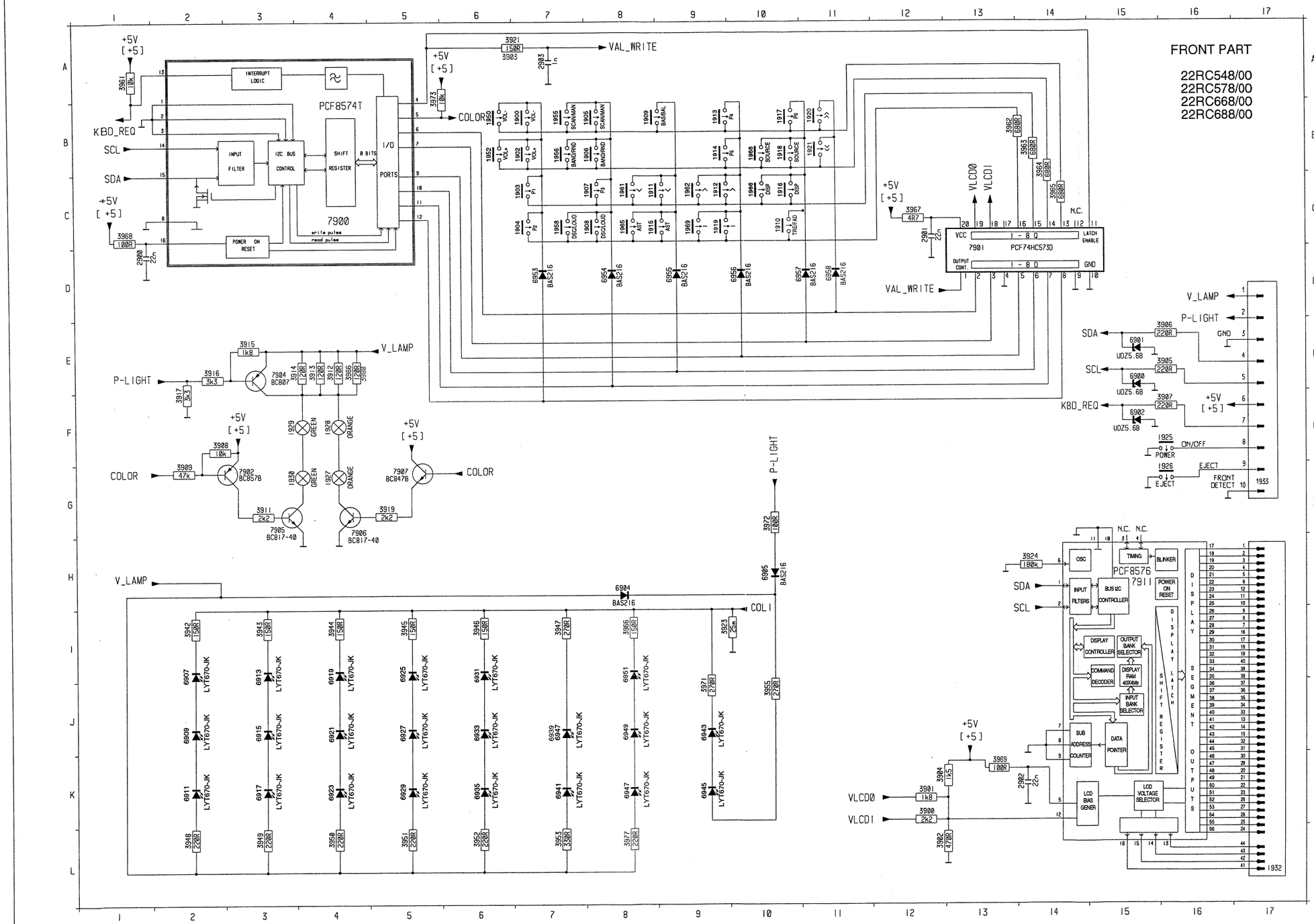

FRONT PART

22RC548/00
22RC578/00
22RC668/00
22RC688/00

	1900	B 7	3953	L 7
	1902	B 7	3955	J10
	1903	C 7	3961	A 1
A	1904	C 7	3962	B13
	1905	B 8	3963	B14
	1906	B 8	3964	B14
	1907	C 8	3965	C14
	1908	C 8	3966	E 4
	1909	B 8	3966	I 8
	1910	C10	3967	C12
B	1911	C 8	3968	C 1
	1912	C 9	3969	K13
	1913	B 9	3971	J 9
	1914	B 9	3972	G10
	1915	C 8	3973	A 5
C	1916	C10	3977	L 8
	1917	B10	6900	E15
	1918	B10	6901	E15
	1919	C 9	6902	F15
	1920	B11	6904	H 8
	1921	B11	6905	H10
D	1925	F16	6907	I 2
	1926	G16	6909	J 2
	1927	G 4	6911	K 2
	1928	F 4	6913	I 3
	1929	F 3	6915	J 3
	1930	G 3	6917	K 3
E	1932	L17	6919	I 4
	1933	G17	6921	J 4
	1950	B 6	6923	K 4
	1952	B 6	6925	I 5
	1955	B 7	6927	J 5
	1956	B 7	6929	K 5
	1958	C 7	6931	I 6
F	1961	C 8	6933	J 6
	1962	C 9	6935	K 6
	1965	C 8	6941	K 7
	1966	C10	6943	J 9
	1968	B10	6945	K 9
	1969	C 9	6947	J 7
G	2900	D 1	6947	K 8
	2901	C12	6949	J 8
	2902	K14	6951	I 8
	2903	A 7	6953	D 7
	3900	K12	6954	D 8
H	3901	K12	6955	D 9
	3902	L12	6956	D10
	3904	K12	6957	D11
	3905	E16	6958	D11
	3906	E16	7900	C 4
	3907	F16	7901	D13
I	3908	F 2	7902	G 3
	3909	G 2	7904	E 3
	3911	G 3	7905	G 3
	3912	E 4	7906	G 4
	3913	E 4	7907	G 5
	3914	E 3	7911	H15
J	3915	E 3		
	3916	E 2		
	3917	F 2		
	3919	G 5		
	3921	A 7		
	3923	I 9		
	3924	H14		
K	3942	I 2		
	3943	I 3		
	3944	I 4		
	3945	I 5		
	3946	I 6		
	3947	I 7		
L	3948	L 2		
	3949	L 3		
	3950	L 4		
	3951	L 5		
	3952	L 6		

DETACHABLE FRONT PWB FOR 22RC668 - 22RC688

B side view

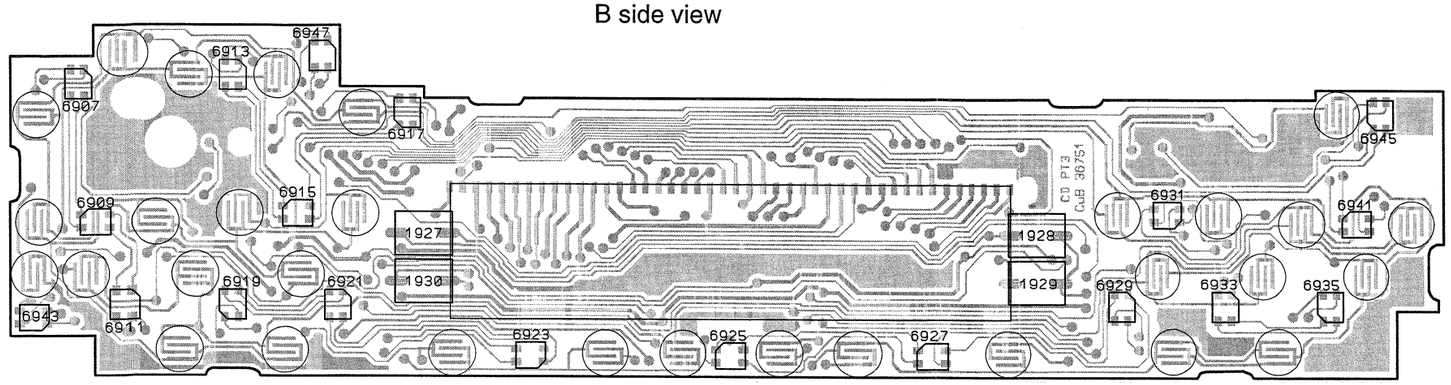

A side view

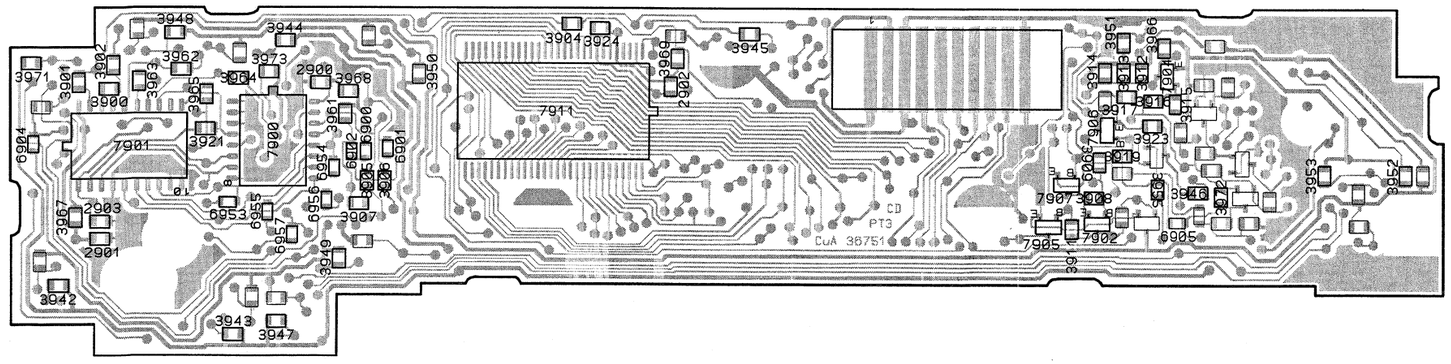

1927	D 2		6943	A 3			
1928	H 2		6945	K 1			
1929	H 3		6947	C 1			
1930	D 3						
6907	A 1						
6909	B 2						
6911	B 3						
6913	C 1						
6915	C 2						
6917	D 2						
6919	C 3						
6921	C 3						
6923	E 3						
6925	F 3						
6927	H 3						
6929	I 3						
6931	I 2						
6933	J 3						
6935	K 3						
6941	K 2						
2900	C 5		3944	C 5		6901	D 6
2901	B 6		3945	F 5		6902	C 6
2902	F 5		3946	J 6		6904	A 6
2903	B 6		3947	C 7		6905	I 6
3900	B 5		3948	B 5		6953	C 6
3901	A 5		3949	C 6		6954	C 6
3902	B 5		3950	D 5		6955	C 6
3904	E 5		3951	I 5		6956	C 6
3905	D 6		3952	K 6		6957	C 6
3906	D 6		3953	C 7		7900	C 6
3907	D 6		3953	K 6		7901	B 6
3908	I 6		3955	I 6		7902	I 6
3909	I 6		3961	C 5		7904	I 5
3911	I 6		3962	B 5		7905	I 6
3912	I 5		3963	B 5		7906	I 6
3913	I 5		3964	C 5		7907	I 6
3914	I 5		3965	B 5		7911	E 5
3915	I 5		3966	I 5			
3916	I 5		3967	A 6			
3917	I 5		3968	C 5			
3919	I 6		3969	F 5			
3921	B 6		3971	A 5			
3923	I 6		3972	J 6			
3924	E 5		3973	C 5			
3942	A 7		6900	D 6			

DETACHABLE FRONT PWB FOR 22RC548 - 22RC578

B side view

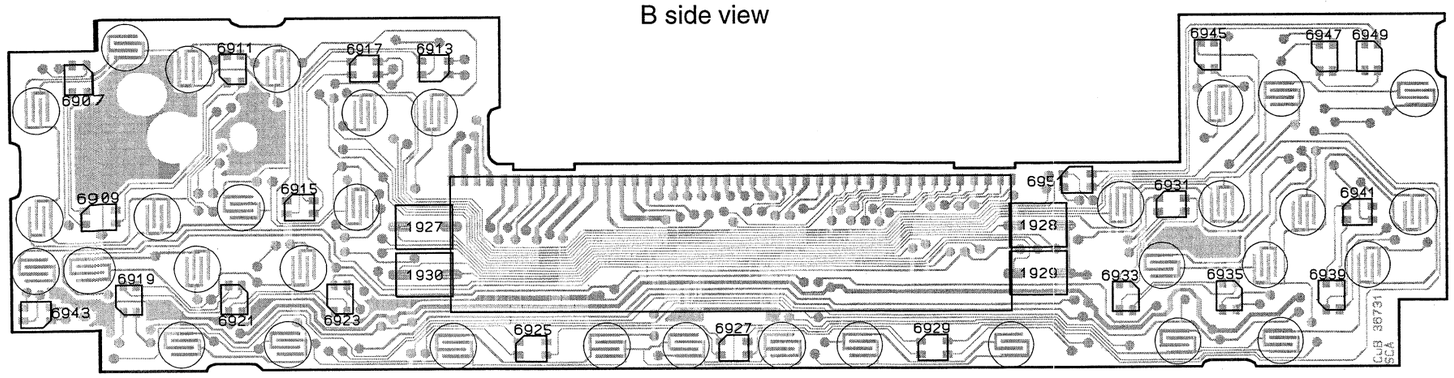

A side view

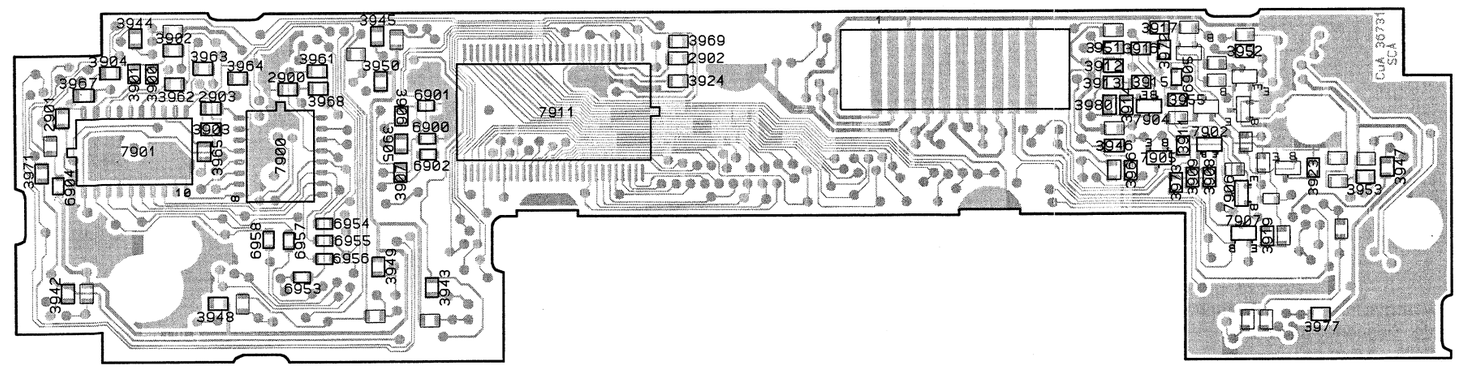

1927	D 2	6941	K 2								
1928	H 2	6943	A 3								
1929	H 2	6945	J 1								
1930	D 2	6947	K 1								
6907	A 1	6949	K 1								
6909	B 2	6951	I 2								
6911	C 1										
6913	D 1										
6915	C 2										
6917	D 1										
6919	B 3										
6921	C 3										
6923	C 3										
6925	E 3										
6927	F 3										
6929	H 3										
6931	I 2										
6933	I 3										
6935	J 3										
6939	K 3										
2900	C 5	3943	D 7	3980	I 5						
2901	A 5	3944	B 5	690	D 6						
2902	F 2	3945	D 5	6900	D 6						
2903	B 5	3946	I 6	6901	D 5						
3900	B 5	3947	K 6	6904	A 6						
3901	B 5	3948	B 7	6905	I 5						
3902	B 5	3949	D 7	6953	C 7						
3903	B 6	3950	D 5	6954	C 6						
3904	B 5	3951	I 5	6955	C 6						
3906	D 5	3952	J 5	6956	C 6						
3906	D 6	3953	K 6	6957	C 6						
3907	D 6	3955	I 5	6958	C 6						
3908	J 6	3961	C 5	7900	C 6						
3909	J 6	3962	B 5	7901	B 6						
3911	I 6	3963	B 5	7902	J 6						
3912	I 5	3964	C 5	7904	I 5						
3913	I 5	3965	B 6	7905	I 6						
3914	I 5	3966	I 6	7906	J 6						
3915	I 5	3967	A 5	7907	J 6						
3916	I 5	3968	C 5	7911	E 5						
3917	I 5	3969	F 2								
3919	J 6	3971	A 6								
3923	J 6	3972	I 5								
3924	F 2	3973	I 6								
3942	A 7	3977	J 7								

IC96 MODULE

Not reparable module. Do not open and do not try to repair yourself!

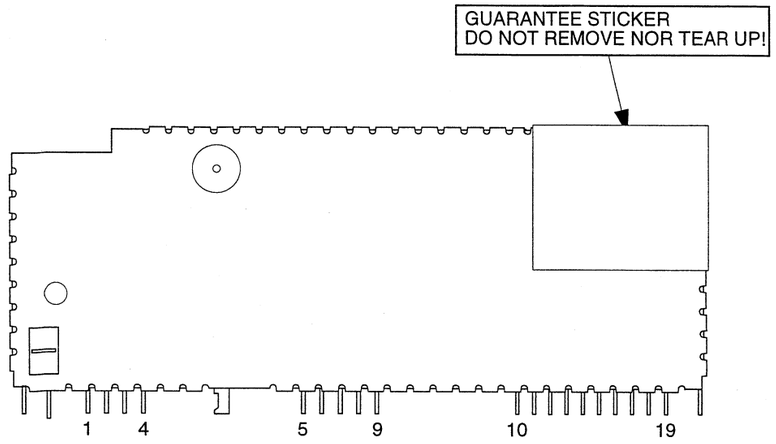

Connections

1	AM/FM Aerial input	10	Multiplex / RDS output signal
2	Ground	11	Unweighted level output
		12	I^2C SDA
5	Inlock detector pin	13	I^2C SCL
6	Vcc 8.5V	14	SDS time constant pin
7	Ground	17	Ground
8	Vcc 5.0V	19	AM audio output
9	V reference		

Quick reference data:

1) AM part
- -Longwave/Mediumwave 144-1710 KHz (inclusive USA)
- -Shortwave 5850-6250 KHz - 49 meter band
- -AM double super concept
- -AM IF1 10.7MHz
- -AM IF2 450KHz
- -First VCO frequency above input signal frequency
- -Second X-tal oscillator frenquency below IF1
- -Usable sensivity α26dB MW = 14µV typ.

1) FM part
- -FM 87.5 - 108MHz
- -FM double super concept
- -FM IF1 72.2MHz
- -FM IF2 10.7MHz
- -First VCO frequency above input signal frequency
- -Second X-tal oscillator frequency below IF1
- -Usable sensivity α26dB =2.5µV typ.
- -THD 1mV δf=75KHz = 0.5% typ
- -Signal to noise ratio = 65dB typ
- -Locktime synthetizer <2mSec

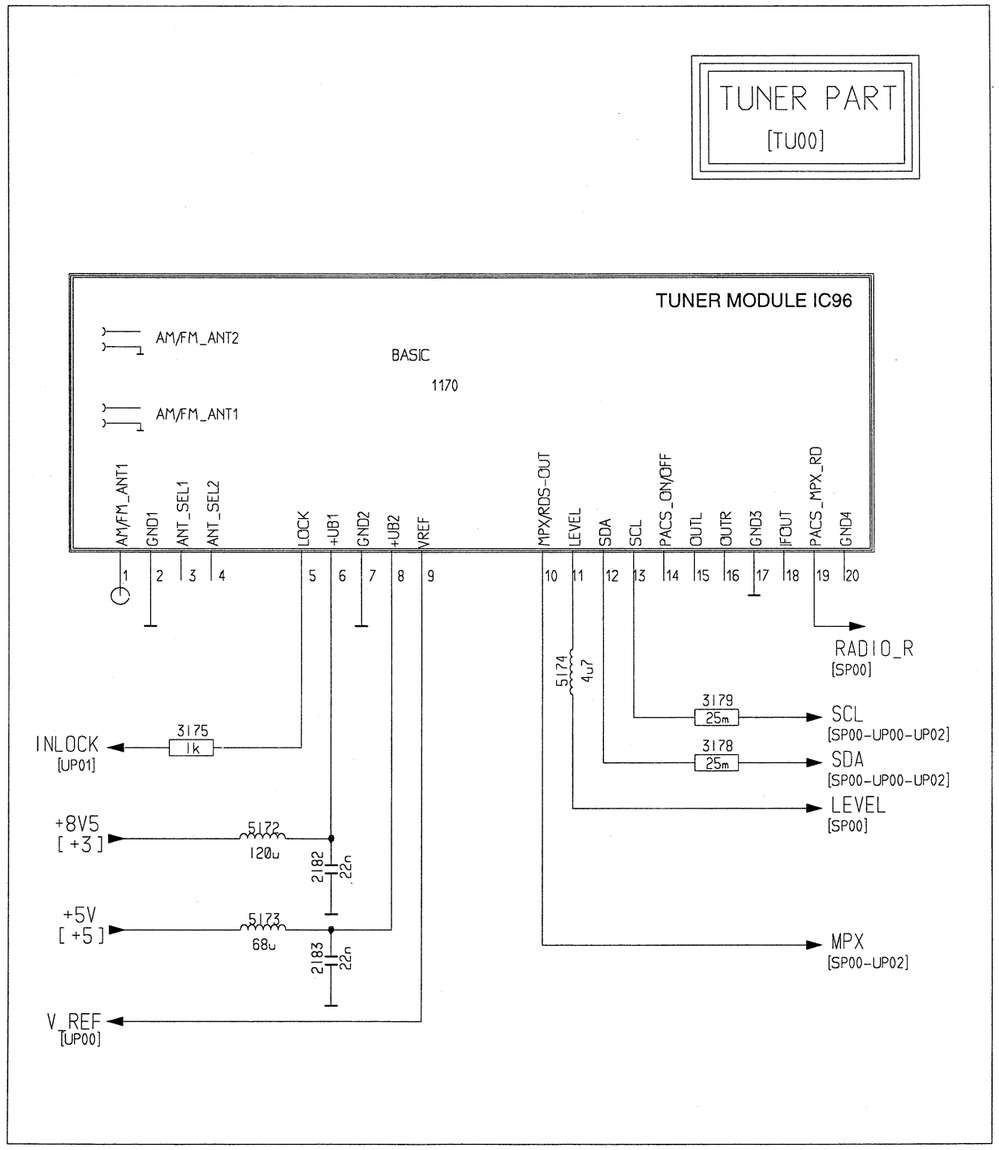

22RC548/00
22RC578/00
22RC668/00
22RC688/00

A4 ..... H16
A5 ..... B1
Ist_PWR_ON G1
MUTE_ENABLE E1
POWER_SENSE C16
P_A_MUTE K14

RESET_uC F1
SET_OFF2 ..... B16
V_LOW E1
V_LOW_uC F1

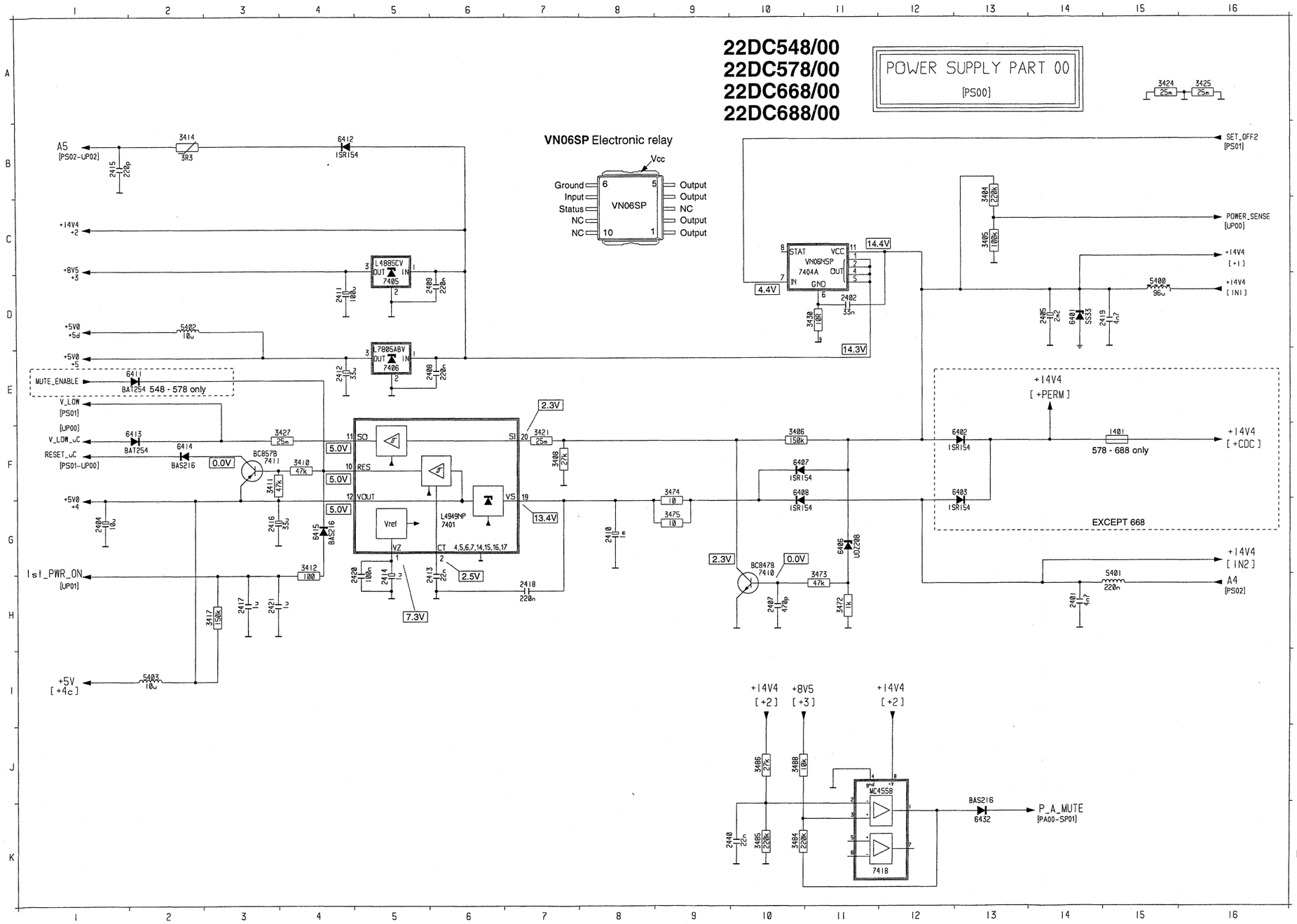

1401 F15
2401 H14
2402 D11
2404 G 1
2405 D14
2407 H10
2408 E 6
2409 D 6
2410 G 8
2411 D 4
2412 E 4
2413 H 6
2414 H 5
2415 B 1
2416 G 3
2417 H 3
2418 H 7
2419 D15
2420 H 5
2421 H 3
2440 K10
3404 B13
3405 C13
3406 F10
3408 F 7
3410 F 4
3411 F 3
3412 G 4
3414 B 2
3417 H 3
3421 F 7
3424 A15
3425 A16
3427 F 4
3430 D11
3472 H11
3473 H11
3474 F 9
3475 G 9
3484 K10
3485 K10
3486 J10
3488 J10
5400 D15
5401 H15
5402 D 2
5403 I 2
6401 D14
6402 F13
6403 F13
6406 G11
6407 F10
6408 F10
6411 E 2
6412 B 4
6413 F 2
6414 F 2
6415 G 4
6432 K13
7401 G 6
7404 D10
7405 D 5
7406 E 5
7410 H10
7411 F 3
7418 K11

CLOCK	A11	NEW	D1	SET_OFF2	B15
CLOCK_1HZ	A10	NO_POWER_SENS	B15	SET_ON_OFF	C15
DETACH_FRONT	I15	ON_OFF_SW	J15	V_LOW	D11
EJECT_SW	K15	PLAY_SWITCH/			
EN_RESET	B1	LOADER	J15		
IGNITION	E15	RESET_uC	F1		

POWER SUPPLY PART 01

[PS01]

22DC548/00
22DC578/00
22DC668/00
22DC688/00

For item 7403, DC voltage are identical for both set On/set OFF

EN_RESET [UP00] — 3477 10R

+5V [+4] — 3478 22k

set Off — 1.5s — 0.0V / 5.0V

NEW [UP00] — 3456 25m

3423 100k — 7416 BC847B — 0.6V — 3452 220k — 3453 100k

gnd — 4.9V

HEF4528BT: CTCA, RCTCA, VDD, 1OA, 1S, 1IA, 1O1A, CDA, RCTCB, 7402, CTCB, 2O, 2IB, CDB, VSS

6425 BAS216 — RESET_uC [PS00–UP00] — 6426 BAS216

3454 220k — 2425 33n

+5V [+4]

+5V[+4]

CLOCK_1HZ [UP00]

pin 8 = GND
pin 16 = VCC 5V

7403 HEF4043BT: EN, S0, Q0, R0, S1, Q1, R1, S2, Q2, R2, S3, Q3, R3

1Hz — CLOCK [PS03]

+5V [+4]

5.0V

+14V4 [IN2] — 3471 220k — 3470 100k

3468 25m — 3461 25m — NO_POWER_SENS [UP00]

set Off — 1.5s — 4.4V / 0.0V — SET_OFF2 [PS00]

3442 220k — BC857B 7413 — 3.8V / 5.0V — 3431 47k — SET_ON-OFF [UP01]

4.5V / 4.8V — 6421 BAS216 — 3441 47k

[+4] +5V

x.xV set On
x.xV set Off

2428 10n — 3449 220k — 6428 BAS216 — 3451 220k — 6427 BAS216 — 2429 10n — 3447 220k

3444 1M — 3445 1M

V_LOW [PS00]

4.5V

IGNITION [UP01]

HEF4043BT Quad R/S latch with 3-state outputs

Symbol	PIN	DESCRIPTION
O_3	1	3-state buffered latch output 3
O_0	2	3-state buffered latch output 0
R_0	3	reset input 0 (active HIGH)
S_0	4	set input 0 (active HIGH)
E0	5	common output enable input
S_1	6	set input 1 (active HIGH)
R_1	7	reset input 1 (active HIGH)
V_{SS}	8	ground
O_1	9	3-state buffered latch output 1
O_2	10	3-state buffered latch output 2
R_2	11	reset input 2 (active HIGH)
S_2	12	set input 2 (active HIGH)
N.C.	13	
S_3	14	set input 3 (active HIGH)
R_3	15	reset input 3 (active HIGH)
V_{DD}	16	supply

HEF4043BT — 8 7 6 5 4 3 2 1 / 9 10 11 12 13 14 15 16

FUNCTION TABLE

inputs			output
EO	S_n	R_n	O_n
L	X	X	Z
H	L	H	L
H	H	X	H
H	L	L	latched

3448 25m

[+4] — 3458 100k

+5V [+4]

3460 10k — 3465 10k — 3464 220k — 3463 220k — 3433 47k — 3432 47k

BAS216 6418 — 2432 10n — DETACH_FRONT [PS03–UP01]

BAS216 6817 — 2433 10n — PLAY_SWITCH LOADER [TA00–UP01]

BAS216 6808 — ON-OFF_SW [PS03–UP01]

BAS216 6811 — EJECT_SW [PS03–UP01]

HEF44528BT Quad R/S latch with 3-state outputs

SYMBOL	PIN	DESCRIPTION
$C_{TC\,A}$	1	External capacitor connection (connected to ground)
$RC_{TC\,A}$	2	External capacitor/resistor connection
$\overline{C}_{DA}$	3	Clear direct input A
I_{1A}	4	Input A (LOW to HIGH triggered)
I_{0A}	5	Input A (HIGH to LOW triggered)
O_A	6	Output A
$\overline{O}_A$	7	Complementary output A (active LOW)
V_{SS}	8	Ground
$\overline{O}_B$	9	Complementary output B (active LOW)
O_B	10	Output B
I_{0B}	11	Input B (HIGH to LOW triggered)
I_{1B}	12	Input B (LOW to HIGH triggered)
$\overline{C}_{DB}$	13	Clear direct input B
$RC_{TC\,B}$	14	External capacitor/resistor connection
$C_{TC\,B}$	15	External capacitor connection (connected to ground)
V_{DD}	16	Supply

HEF4528BT — 8 7 6 5 4 3 2 1 / 9 10 11 12 13 14 15 16

FUNCTION TABLE

inputs			outputs	
I_0	I1	$\overline{C}_D$	O	$\overline{O}$
↘	L	H	⎍	⎍
H	↗	H	⎍	⎍
X	X	L	L	H

2425	G 5	3422	D11	3441	C14	3448	G 7	3454	F 6	3463	I 10	3471	B12	6418	J 8	7402	G 4
2428	D 9	3423	C 5	3442	C13	3449	D 8	3456	D 3	3464	I 10	3477	B 4	6421	D14	7403	B11
2429	E 9	3431	C15	3444	E10	3451	E 7	3458	I 6	3465	I 9	3478	C 6	6425	F 2	7413	C14
2432	J10	3432	I11	3445	E10	3452	D 6	3460	I 9	3468	B14	6418	J 8	6426	G 2	7416	D 6
2433	J10	3433	I11	3447	E 8	3453	D 6	3461	B15	3470	B12	6421	D14	6427	E 8		
														6428	D 8		
														6808	K 8		
														6811	K 8		
														6817	J 8		

A1	B2/E7	B1	D7	B7	B7
A2	E7/D2	B2	E7	B8	A7
A3	F7/G2	B3	D7	REMOTE_2	G5
A4	B7	B4	D7	REM_SUPPLY	F5
A5	F7	B5	C7	SCL_G	F7
A6	E7	B6	C7	SDA_G	G7

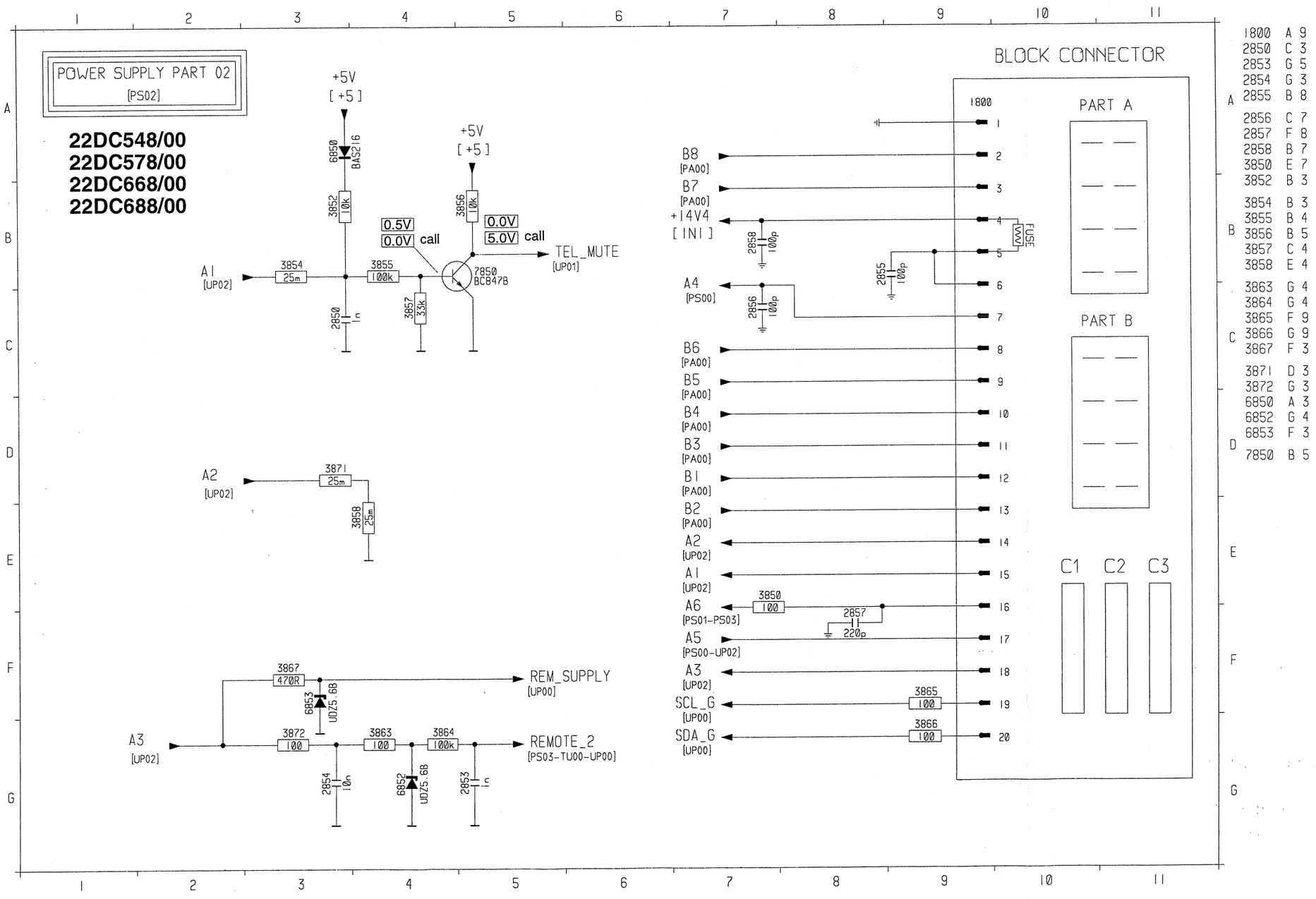

1800	A	9
2850	C	3
2853	G	5
2854	G	3
2855	B	8
2856	C	7
2857	F	8
2858	B	7
3850	E	7
3852	B	3
3854	B	3
3855	B	4
3856	B	5
3857	C	4
3858	E	4
3863	G	4
3864	G	4
3865	F	9
3866	G	9
3867	F	3
3871	D	3
3872	G	3
6850	A	3
6852	G	4
6853	F	3
7850	B	5

A6	A1	ON-OFF_SW	G10
BL_ON-OFF	J6	PWM0	D1
CLOCK	F6	SCL_F	D13
DETACH_FRONT	I12	SDA_F	E13
EJECT_SW	H10	V_LAMP	C5/I13
KEYBOARD_INT	E13	V_LED	A5/H13

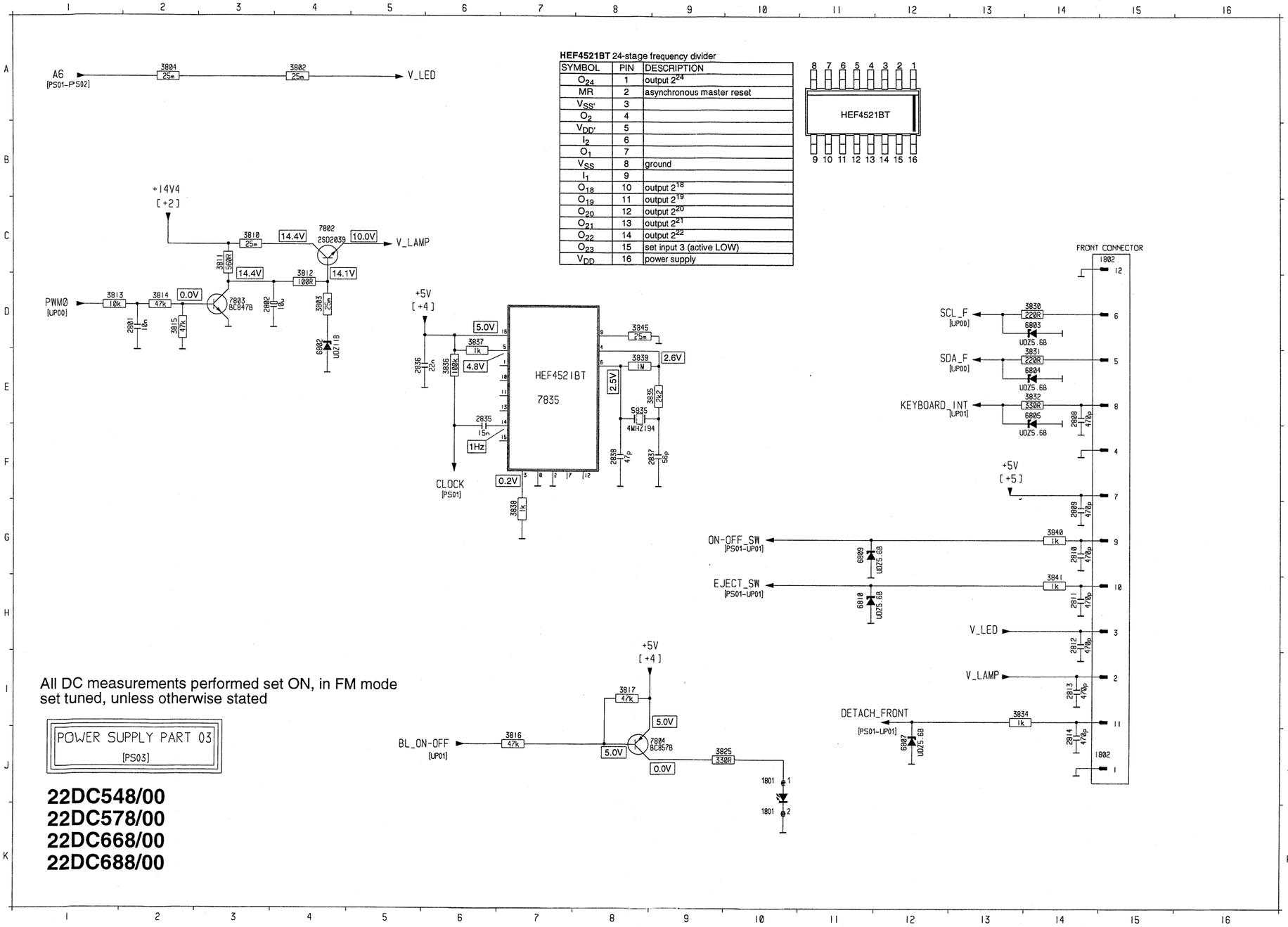

HEF4521BT 24-stage frequency divider

SYMBOL	PIN	DESCRIPTION
O_{24}	1	output 2^{24}
MR	2	asynchronous master reset
$V_{SS'}$	3	
O_2	4	
$V_{DD'}$	5	
I_2	6	
O_1	7	
V_{SS}	8	ground
I_1	9	
O_{18}	10	output 2^{18}
O_{19}	11	output 2^{19}
O_{20}	12	output 2^{20}
O_{21}	13	output 2^{21}
O_{22}	14	output 2^{22}
O_{23}	15	set input 3 (active LOW)
V_{DD}	16	power supply

All DC measurements performed set ON, in FM mode set tuned, unless otherwise stated

POWER SUPPLY PART 03
[PS03]

22DC548/00
22DC578/00
22DC668/00
22DC688/00

1801	K10
1802	C14
2801	D 2
2802	D 3
2808	E14
2809	G14
2810	G14
2811	H14
2812	H14
2813	I14
2814	J14
2835	E 6
2836	E 5
2837	F 9
2838	F 8
3802	A 4
3803	D 4
3804	A 2
3810	C 4
3811	C 3
3812	D 4
3813	D 1
3814	D 2
3815	D 2
3816	J 7
3817	I 8
3825	J10
3830	D14
3831	E14
3832	E14
3834	I13
3835	E 9
3836	E 6
3837	D 6
3838	G 7
3839	E 8
3840	G14
3841	H14
3845	D 8
5835	E 8
6802	D 4
6803	D14
6804	E14
6805	E14
6807	J12
6809	G11
6810	H11
7802	C 4
7803	D 3
7804	J 9
7835	E 7

MAIN PWB LAYOUT. TOP SIDE VIEW

22RC548/00
22RC578/00
22RC668/00
22RC688/00

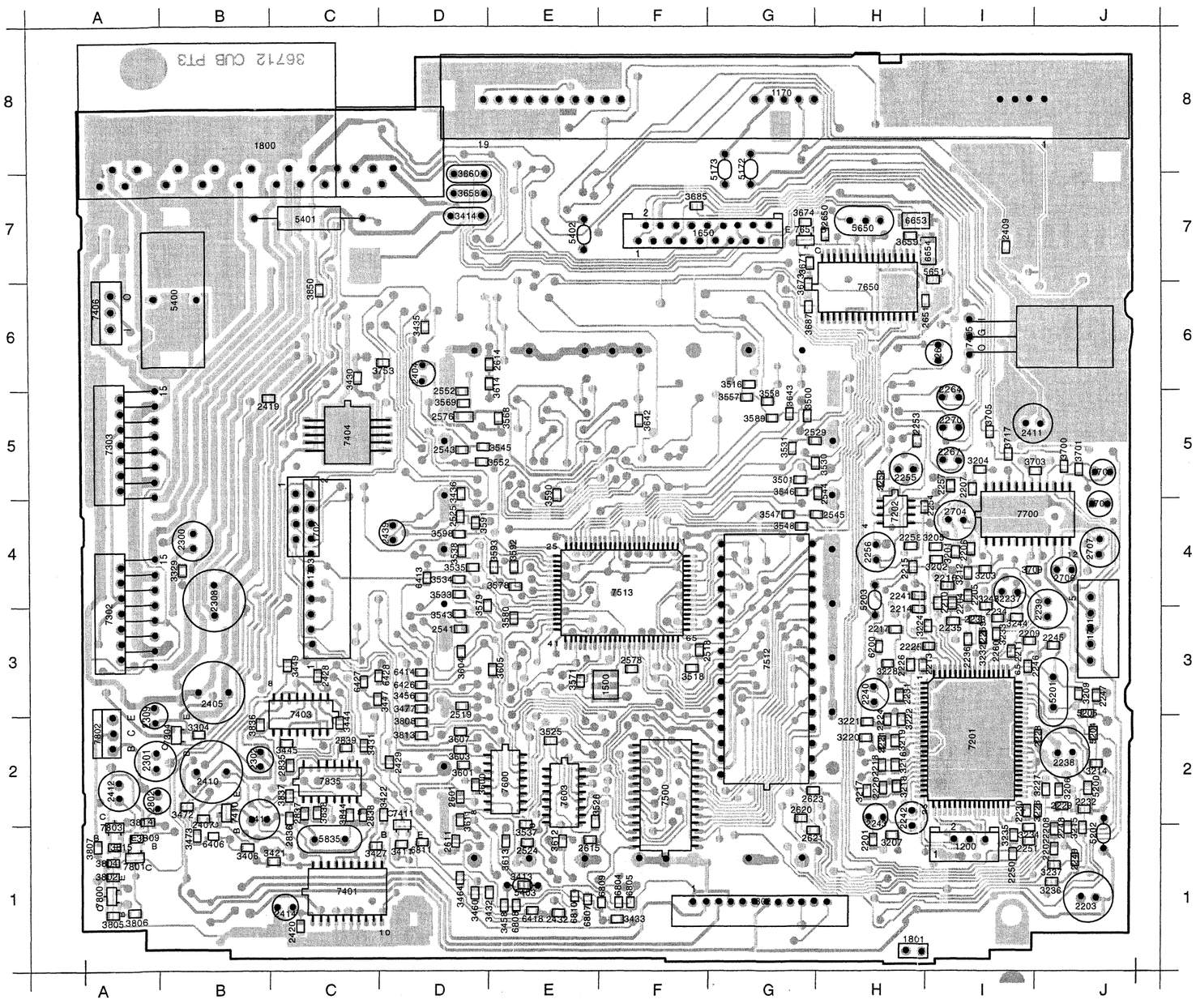

1170	G 8	2410	B 2	3413	E 1	3703	I 5
1200	I 2	2411	I 5	3414	D 7	3705	I 5
1500	F 3	2412	A 2	3421	C 1	3709	I 4
1650	F 7	2414	C 1	3422	D 2	3717	I 5
1701	J 4	2416	B 2	3427	C 2	3753	D 6
1702	C 5	2419	B 6	3430	C 6	3802	A 1
1703	C 4	2420	C 1	3431	C 2	3804	A 1
1800	B 8	2428	C 3	3432	E 1	3805	A 1
1801	H 1	2429	D 2	3433	F 1	3806	A 1
1802	G 1	2432	E 1	3435	D 6	3807	A 2
2201	H 2	2439	D 4	3436	D 5	3808	D 3
2202	J 1	2518	F 3	3444	C 3	3809	A 2
2203	J 1	2519	D 3	3445	C 2	3813	D 3
2204	I 4	2524	E 2	3447	C 3	3814	A 2
2205	I 4	2525	D 5	3449	C 3	3815	A 2
2206	I 4	2529	G 5	3456	D 3	3836	B 3
2207	I 5	2541	D 4	3458	E 1	3837	C 2
2208	J 2	2543	D 5	3460	D 1	3838	C 2
2209	I 3	2544	H 5	3464	D 1	3844	C 2
2210	I 4	2545	G 5	3472	B 2	3850	C 7
2211	I 3	2552	D 6	3473	B 2	5172	G 8
2213	H 3	2576	D 5	3477	D 3	5173	G 8
2214	H 4	2578	F 3	3500	G 5	5200	J 2
2215	H 4	2601	D 2	3501	G 5	5201	J 3
2216	I 4	2611	D 2	3516	G 6	5202	J 2
2217	H 4	2614	D 6	3518	F 3	5203	H 4
2218	H 2	2615	E 2	3525	E 2	5204	J 3
2220	H 2	2620	G 2	3526	E 2	5205	J 3
2221	H 2	2621	G 2	3530	G 5	5400	B 7
2224	H 3	2623	G 2	3531	G 5	5401	C 7
2225	I 3	2650	H 7	3533	D 4	5402	E 7
2226	H 3	2651	H 7	3534	D 4	5403	E 1
2228	J 3	2700	J 5	3535	D 4	5650	H 7
2229	J 2	2701	J 5	3537	E 2	5651	I 7
2230	I 2	2704	I 5	3538	D 4	5835	C 2
2231	H 3	2706	J 4	3543	D 4	6200	H 3
2232	J 2	2707	J 4	3545	D 5	6406	B 2
2233	I 4	2802	A 2	3546	G 5	6413	D 4
2234	I 4	2835	C 2	3547	G 5	6414	D 3
2235	I 4	2836	C 2	3548	G 4	6418	E 1
2236	I 3	2837	C 2	3552	D 5	6426	D 3
2237	I 4	2838	C 2	3557	G 6	6427	C 3
2238	J 2	2839	C 2	3558	G 6	6428	C 3
2239	J 4	3201	I 4	3568	E 5	6653	H 7
2240	H 3	3202	I 4	3569	D 6	6654	I 7
2241	H 4	3203	I 4	3571	E 3	6804	F 1
2242	H 2	3204	I 5	3578	E 4	6805	F 1
2243	H 2	3205	I 4	3579	D 4	6807	E 1
2245	J 3	3206	J 2	3580	E 4	6808	E 1
2246	I 3	3207	H 2	3589	G 5	6809	F 1
2247	J 3	3209	J 3	3590	E 5	6810	E 1
2248	J 2	3212	I 4	3591	D 4	6811	D 2
2249	J 1	3214	J 2	3592	E 4	7201	I 2
2250	I 1	3215	J 2	3593	E 4	7202	H 5
2251	I 2	3216	H 2	3598	D 4	7302	A 4
2252	H 5	3217	H 2	3600	D 2	7303	A 5
2253	H 5	3218	H 2	3601	D 2	7304	B 3
2254	H 5	3219	H 2	3603	D 2	7401	C 1
2255	H 5	3220	H 3	3604	D 3	7403	C 3
2256	H 4	3221	H 3	3605	E 3	7404	C 5
2257	I 5	3222	H 3	3607	D 3	7405	I 6
2258	H 4	3224	I 4	3611	D 2	7406	A 6
2259	I 3	3226	J 2	3612	E 2	7410	B 2
2260	I 3	3227	J 2	3613	E 2	7411	D 2
2261	I 6	3228	H 3	3614	D 6	7500	F 2
2264	I 6	3232	I 3	3642	F 5	7512	G 3
2267	I 5	3233	I 3	3643	G 5	7513	F 4
2270	I 5	3234	I 2	3658	D 8	7600	E 2
2300	B 4	3235	I 2	3659	H 7	7603	E 2
2301	A 2	3236	J 1	3660	D 8	7650	H 7
2302	B 2	3237	J 1	3671	G 7	7651	G 7
2308	B 4	3243	I 4	3673	G 7	7700	I 5
2309	A 3	3244	I 4	3674	G 7	7800	A 1
2404	D 6	3304	B 3	3685	F 7	7801	A 1
2405	B 3	3329	B 4	3687	G 6	7802	A 3
2407	B 2	3406	B 2	3700	J 5	7803	A 2
2409	I 7	3411	D 2	3701	J 5	7835	C 2

CASS_L	F2	FL	D17	MPX	H4	RDS_MUTE	A11
CASS_R	E2	FR	E17	MPX_RDS	C3	RESET_DEV	K16
CD_L	E2/J6	INL	I1	PAUSE	A12	RL	F17
CD_R	D2/J6	INR	K1	POM	C17	RR	F17
CLOCK_RDS	J8	INREF_BCL	J1	RADIO_R	G3	SCL	I12
DATA_RDS	J8	LEVEL	C2	RDS_HOLD	A11	SDA	J12

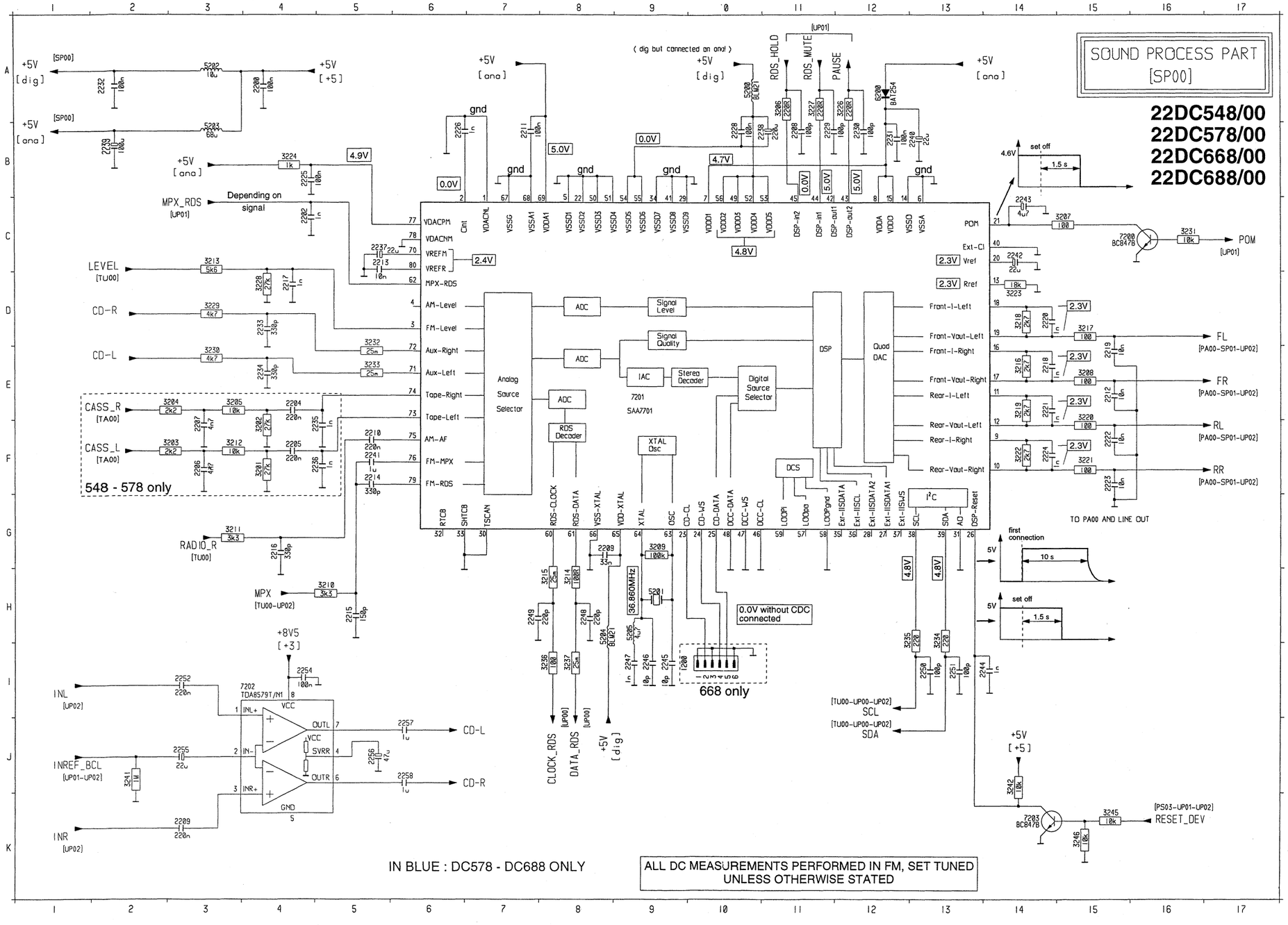

| | | | | | | |

FL C3
FR F3
LO_FL B5
LO_FR E5
LO_RL B11
LO_RR E11

P_A_MUTE D11/G11
P_A_MUTE D6/G6
RL C8
RR F8

SOUND PROCESS PART 01

[SP01]

22DC578/00
22DC668/00
22DC688/00

NOT IN 22DC548/00

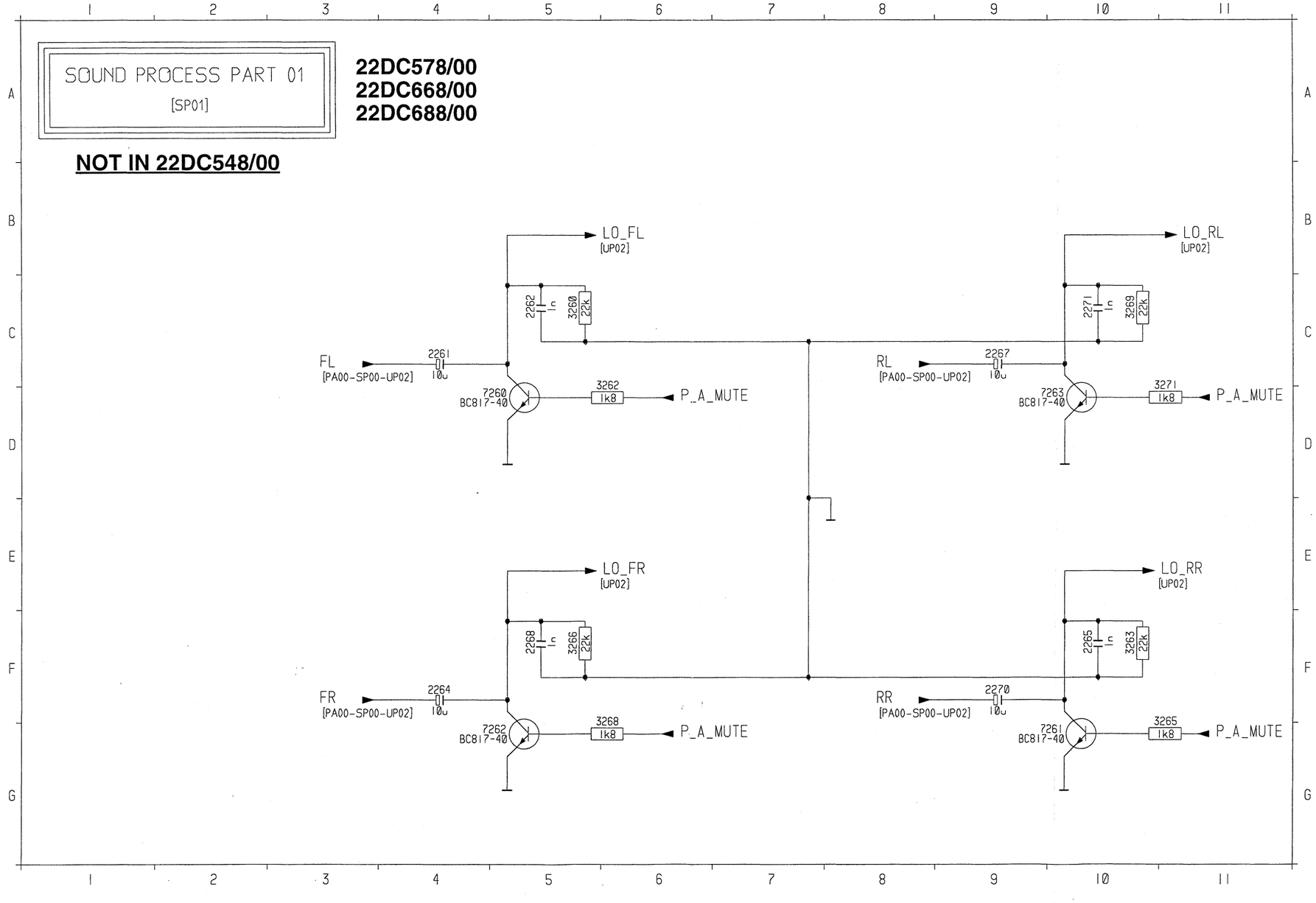

A	2261	C 4
	2262	C 5
	2264	F 4
	2265	FI0
	2267	C 9
	2268	F 5
	2270	F 9
	2271	CI0
	3260	C 5
	3262	D 6
B	3263	FI0
	3265	GI1
	3266	F 5
	3268	G 6
	3269	CI0
	3271	DI1
	7260	D 5
C	7261	GI0
	7262	G 5
	7263	DI0

AD[0] F15	A[9] K11	CLOCK_RDS J9	I2C_SWITCH2 ..... L9/C17	PSEN D6/F8	RESET_uC C9	SCL_G D13	ST_BY D1/I12/F8G3
ALE B5/G10	BUS_INT E1	DATA_RDS K9	ME/FE_MANUEL K9	PWM0 ..... B9	SCA_CLOCK E1	SCL_uC D7/D15	TEMP_SENSE J1
A[10] K11	CD_CLOCK E1	DEEMPHASIS L9	NEW D9	READ I4	SCA_DATA F1	SDA C11	V_LOW_uC F2
A[13] K11	CD_DATA F1	EN_RESET J12	NO_POWER_SENS I1	REMOTE_2 ..... L1	SCA_ENABLE G1	SDSDA_F B13	V_REF K1
A[14] L11	CD_MRQ G1	HEAD_TEA0677 ..... L9	PI_7 ..... G3/J10	REM_SUPPLY C1	SCL C11	SDA_G B13	WRITE I4
A[8] K11	CLOCK_1HZ H1	I2C_SWITCH1 ..... F1/B17	POWER_SENSE I1	RESET K9	SCL_F C13	SDA_uC D7/A15	

22DC548/00
22DC578/00
22DC668/00
22DC688/00

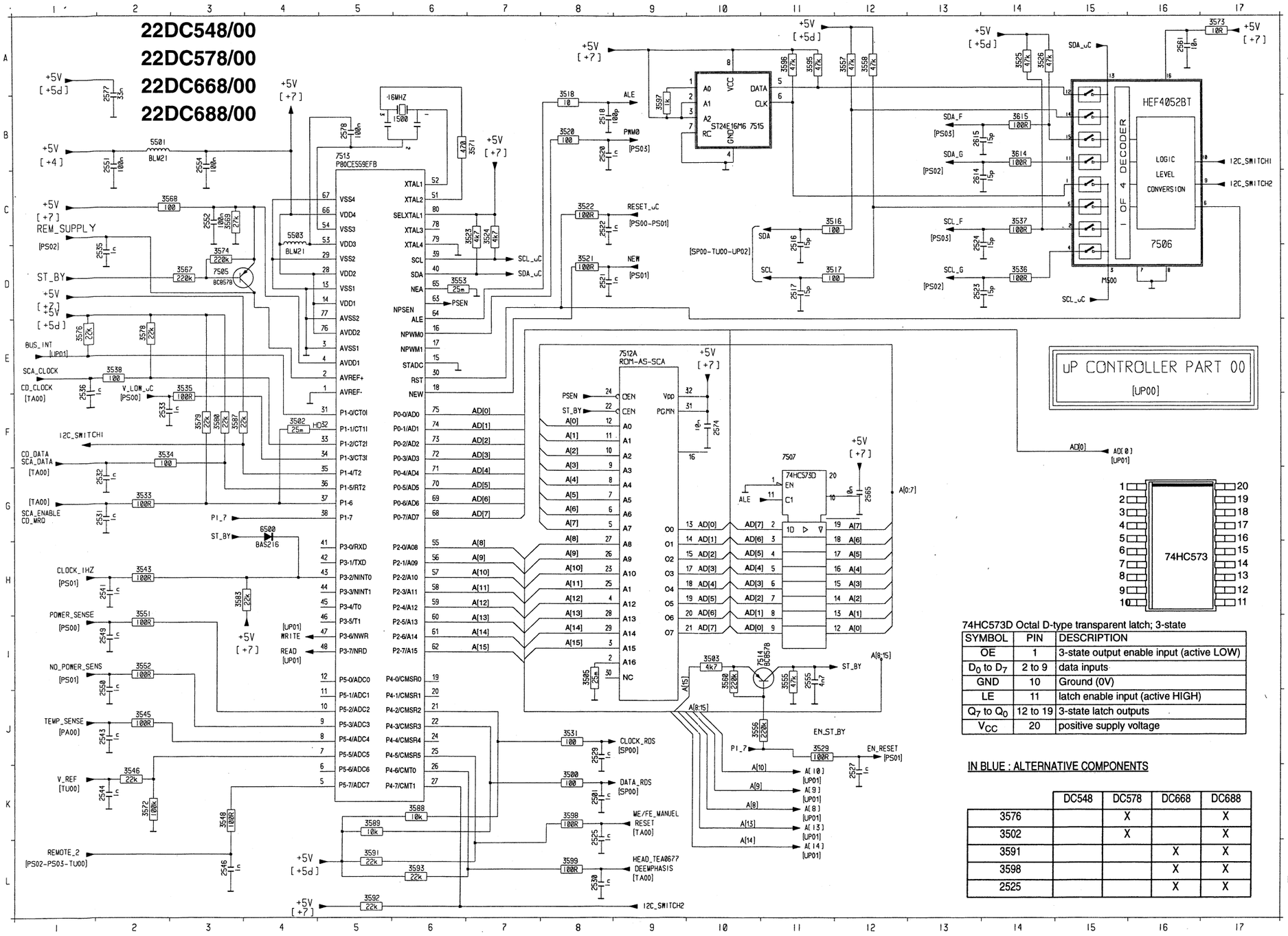

uP CONTROLLER PART 00

[UP00]

74HC573D Octal D-type transparent latch; 3-state

SYMBOL	PIN	DESCRIPTION
OE	1	3-state output enable input (active LOW)
D_0 to D_7	2 to 9	data inputs
GND	10	Ground (0V)
LE	11	latch enable input (active HIGH)
Q_7 to Q_0	12 to 19	3-state latch outputs
V_{CC}	20	positive supply voltage

IN BLUE : ALTERNATIVE COMPONENTS

	DC548	DC578	DC668	DC688
3576		X		X
3502		X		X
3591			X	X
3598			X	X
2525			X	X

1500 B 5 3573 A17
2501 K 8 3574 D 3
2516 C11 3576 E 1
2517 D11 3578 E 2
2518 B 8 3579 F 3
2520 B 8 3580 F 3
2521 D 8 3583 H 3
2522 C 8 3587 F 3
2523 D13 3588 K 6
2524 C13 3589 K 5
2525 K 8 3591 L 5
2527 K12 3592 L 5
2529 J 8 3593 L 6
2530 L 8 3595 A11
2531 G 2 3596 A11
2532 G 2 3597 B 9
2533 F 2 3598 K 8
2535 D 2 3599 L 8
2536 E 1 3614 B14
2541 H 2 3615 B14
2543 J 2 5501 B 2
2544 K 2 5503 C 4
2546 L 3 6500 G 4
2549 I 2 7505 D 3
2550 I 2 7506 D16
2551 B 2 7507 F11
2552 C 3 7512A E 9
2554 B 3 7513 B 5
2555 I11 7514 I11
2561 A16 7515 B11
2565 G12
2574 F10
2577 A 2
2578 B 5
2614 C13
2615 B13
3500 K 8
3502 F 4
3503 I10
3505 I 8
3516 C11
3517 D11
3518 B 8
3520 B 8
3521 D 8
3522 C 8
3523 C 7
3524 C 7
3525 A14
3526 A14
3529 J11
3531 J 8
3533 G 2
3534 F 2
3535 E 3
3536 D14
3537 C14
3538 E 2
3543 H 2
3545 J 2
3546 K 2
3548 K 3
3551 I 2
3552 I 2
3553 D 6
3555 I11
3556 J10
3557 A12
3558 A12
3560 I10
3567 D 3
3568 C 2
3569 C 3
3571 B 7
3572 K 2

DC voltages of microprocessor (FM mode, set tuned)

1	0.0V GND	41	N.C.
2	4.8V	42	N.C.
3	0.0V GND	43	5.0V ⊓⊓ 1Hz
4	4.9V VDD	44	N.C.
5	4.8V	45	N.C.
6	N.C.	46	N.C.
7	4.0V	47	5.0V
8	0.6V	48	5.0V
9	4.5V	49	0.0V
10	4.4V	50	0.0V
11	N.C.	51	2.5V 16MHz
12	N.C.	52	2.1V 16MHz
13	0.0V GND	53	5.0V VDD
14	5.0 V VDD	54	GND
15	0.0V GND	55	DATA
16	0.0V	56	DATA
17	N.C.	57	DATA
18	0.0V	58	DATA
19	N.C.	59	DATA
20	N.C.	60	DATA
21	4.9V	61	DATA
22	4.2V	62	DATA
23	0.0V	63	2.5V
24	N.C.	64	1.6V
25	N.C.	65	0.0V
26	5.2V	66	5.0V VDD
27	0.0V	67	GND
28	5.0V VDD	68	DATA
29	0.0V GND	69	DATA
30	0.0V	70	DATA
31	N.C.	71	DATA
32	N.C.	72	DATA
33	5.0V	73	DATA
34	5.0V	74	DATA
35	5.0V	75	DATA
36	5.0V	76	5.0V VDD
37	5.0V	77	GND
38	4.8V	78	N.C.
39	5.0V	79	0.0V
40	4.8V	80	5.0V

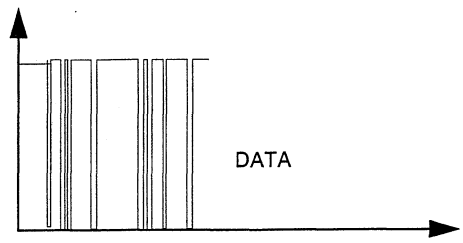

74HC42D BCD to decimal decoder (1 of 10)

SYMBOL	PIN	DESCRIPTION
Y0 to Y9	1, 2, 3, 4, 5, 6 7, 9, 10, 11	Multiplexer outputs
GND	8	Ground (0V)
A0 to A3	15, 14, 13, 12	data inputs
VCC	16	positive supply voltage

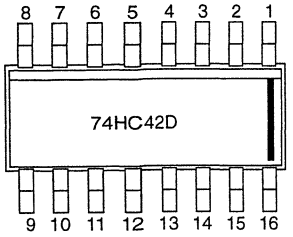

FUNCTION TABLE

INPUTS				OUTPUTS									
A_3	A_2	A_1	A_0	Y_0	Y_1	Y_2	Y_3	Y_4	Y_5	Y_6	Y_7	Y_8	Y_9
L	L	L	L	L	H	H	H	H	H	H	H	H	H
L	L	L	H	H	L	H	H	H	H	H	H	H	H
L	L	H	L	H	H	L	H	H	H	H	H	H	H
L	L	H	H	H	H	H	L	H	H	H	H	H	H
L	H	L	L	H	H	H	H	L	H	H	H	H	H
L	H	L	H	H	H	H	H	H	L	H	H	H	H
L	H	H	L	H	H	H	H	H	H	L	H	H	H
L	H	H	H	H	H	H	H	H	H	H	L	H	H
H	L	L	L	H	H	H	H	H	H	H	H	L	H
H	L	L	H	H	H	H	H	H	H	H	H	H	L
H	L	H	L	H	H	H	H	H	H	H	H	H	H
H	L	H	H	H	H	H	H	H	H	H	H	H	H
H	H	L	L	H	H	H	H	H	H	H	H	H	H
H	H	L	H	H	H	H	H	H	H	H	H	H	H
H	H	H	L	H	H	H	H	H	H	H	H	H	H
H	H	H	H	H	H	H	H	H	H	H	H	H	H

74HC251D 8-input multiplexer; 3-state

SYMBOL	PIN	DESCRIPTION
I_0 to I_7	4,3,2,1,15,14, 13,12	Multiplexer inputs
Y	5	Multiplexer output
$\overline{Y}$	6	Complementary multiplexer output
$\overline{OE}$	7	3-state output enable input (active LOW)
GND	8	Ground
S_0, S_1, S_2	11, 10, 9	select inputs
V_{CC}	16	Positive supply voltage

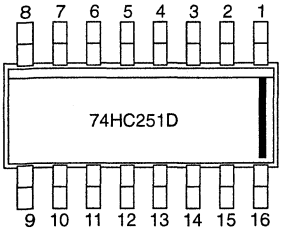

FUNCTION TABLE

INPUTS												OUTPUTS	
$\overline{OE}$	S_2	S_1	S_0	I_0	I_1	I_2	I_3	I_4	I_5	I_6	I_7	$\overline{Y}$	Y
H	X	X	X	X	X	X	X	X	X	X	X	Z	Z
L	L	L	L	L	X	X	X	X	X	X	X	H	L
L	L	L	L	H	X	X	X	X	X	X	X	L	H
L	L	L	H	X	L	X	X	X	X	X	X	H	L
L	L	L	H	X	H	X	X	X	X	X	X	L	H
L	L	H	L	X	X	L	X	X	X	X	X	H	L
L	L	H	L	X	X	H	X	X	X	X	X	L	H
L	L	H	H	X	X	X	L	X	X	X	X	H	L
L	L	H	H	X	X	X	H	X	X	X	X	L	H
L	H	L	L	X	X	X	X	L	X	X	X	H	L
L	H	L	L	X	X	X	X	H	X	X	X	L	H
L	H	L	H	X	X	X	X	X	L	X	X	H	L
L	H	L	H	X	X	X	X	X	H	X	X	L	H
L	H	H	L	X	X	X	X	X	X	L	X	H	L
L	H	H	L	X	X	X	X	X	X	H	X	L	H
L	H	H	H	X	X	X	X	X	X	X	L	H	L
L	H	H	H	X	X	X	X	X	X	X	X	L	H

74HC259D 8-addressable latch

SYMBOL	PIN	DESCRIPTION
A_0 to A_2	1,2,3	Address inputs
Q_0 to Q_7	4, 5, 6, 7, 9, 10, 11, 12	Latch outputs
GND	8	Ground
D	13	Data input
$\overline{LE}$	14	latch enable input (active LOW)
$\overline{MR}$	15	conditional reset input(active LOW)
V_{CC}	16	Positive supply voltage

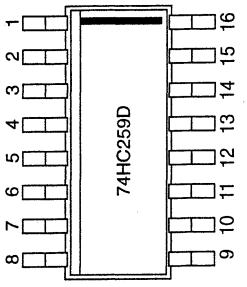

H=HIGH voltage level.
L= LOW voltage level.
X= don't care.
d= HIGH or LOW data one set-up time prior to the LOW-to-HIGH $\overline{LE}$ transition.
q= lower case letters indicate the state of the referenced output established during the last cycle in which it was addressed or cleared.

FUNCTION TABLE

OPERATING MODES	INPUTS						OUTPUTS							
	MR	LE	D	A0	A1	A2	Q0	Q1	Q2	Q3	Q4	Q5	Q6	Q7
master reset	**L**	**H**	**X**	**X**	**X**	**X**	**L**	**L**	**L**	**L**	**L**	**L**	**L**	**L**
demuliplex (active HIGH) decoder (when D=H)	L	L	d	L	L	L	Q=d	L	L	L	L	L	L	L
	L	L	d	H	L	L	L	Q=d	L	L	L	L	L	L
	L	L	d	L	H	L	L	L	Q=d	L	L	L	L	L
	L	L	d	H	H	L	L	L	L	Q=d	L	L	L	L
	L	L	d	L	L	H	L	L	L	L	Q=d	L	L	L
	L	L	d	H	L	H	L	L	L	L	L	Q=d	L	L
	L	L	d	L	H	H	L	L	L	L	L	L	Q=d	L
	L	L	d	H	H	H	L	L	L	L	L	L	L	Q=d
store (do nothing)	H	H	X	X	X	X	q_0	q_1	q_2	q_3	q_4	q_5	q_6	q_7
addressable latch	H	L	d	L	L	L	Q=d	q_1	q_2	q_3	q_4	q_5	q_6	q_6
	H	L	d	H	L	L	q_0	Q=d	q_2	q_3	q_4	q_5	q_6	q_6
	H	L	d	L	H	L	q_0	q_1	Q=d	q_3	q_4	q_5	q_6	q_6
	H	L	d	H	H	L	q_0	q_1	q_2	Q=d	q_4	q_5	q_6	q_6
	H	L	d	L	L	H	q_0	q_1	q_2	q_3	Q=d	q_5	q_6	q_6
	H	L	d	H	L	H	q_0	q_1	q_2	q_3	q_4	Q=d	q_6	q_6
	H	L	d	L	H	H	q_0	q_1	q_2	q_3	q_4	q_5	Q=d	q_6
	H	L	d	H	H	H	q_0	q_1	q_2	q_3	q_4	q_5	q_6	Q=d

AD[0]	B6	BL_ON-OFF	F11	EN_WRITE	C4/E7	MPX_RDS	G11	POWER_MUTE	E11	TEL_MUTE	D15
A[10]	C6	BUS_INT	H7	IGNITION	C15	MRQ_D2B	G7	RDS_HOLD	G11	WRITE	B2
A[13]	C2	DETACH_FRONT	F15	INLOCK	D15	ON-OFF_SW	H15	RDS_MUTE	H11	Ist_PWR_ON	B15
A[14]	B2	EJECT_SW	F15	KEYBOARD_INT	G15	PAUSE	G15	READ	C2		
A[8]	C6	EN_READ_1	C4/B15	LOADER	D15	PLAY_SWITCH	D15	RESET_DEV	I1		
A[9]	C6	EN_READ_2	B4/E14	ME/FE_AUTO	C15	POM	H11	SET_ON-OFF	F11		

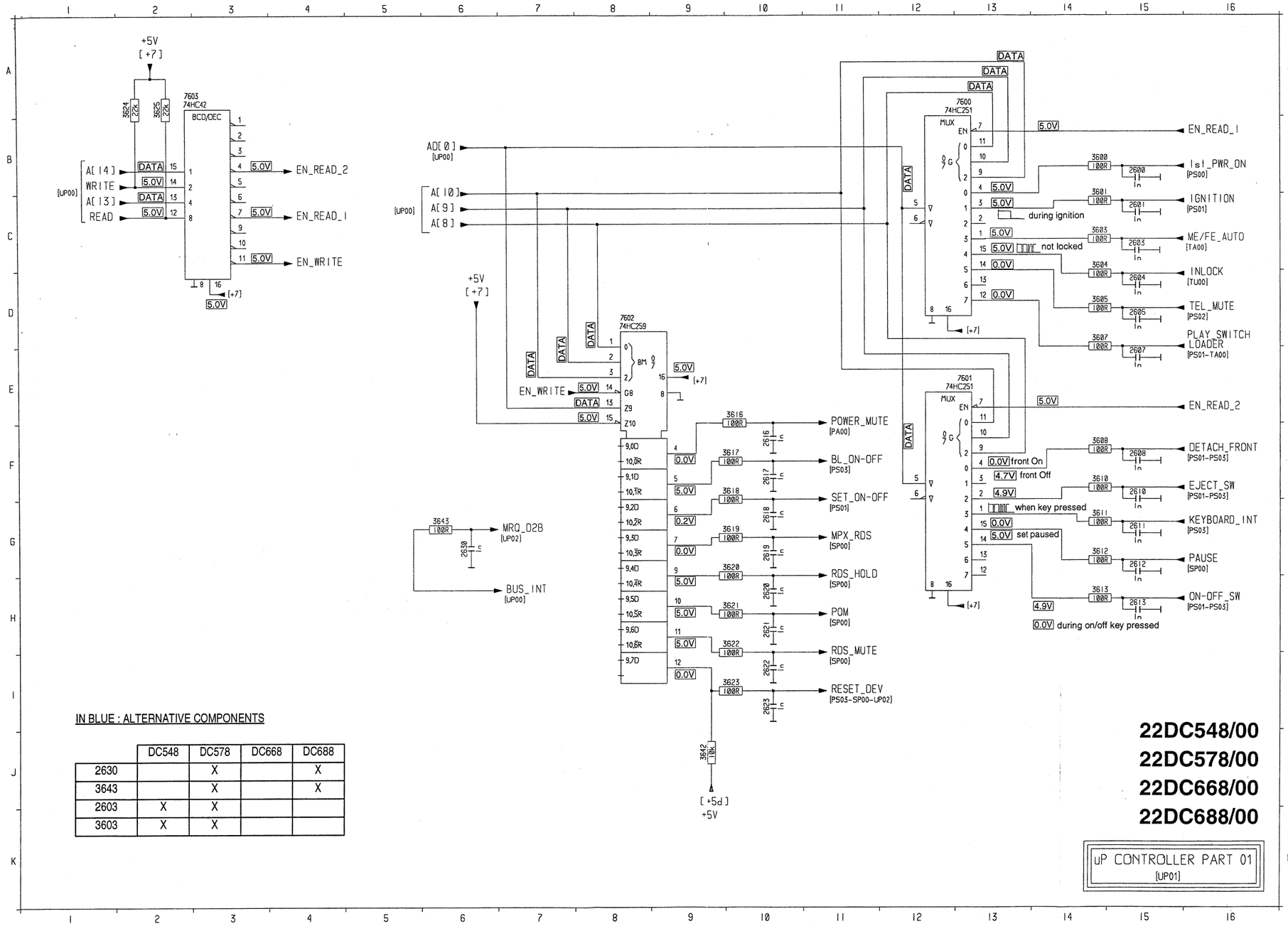

2600 B15
2601 C15
2603 C15
2604 D15
2605 D15
2607 E15
2608 F15
2610 F15
2611 G15
2612 G15
2613 H15
2616 F10
2617 F10
2618 G10
2619 G10
2620 H10
2621 H10
2622 I10
2623 I10
2630 G 6
3600 B14
3601 C14
3603 C14
3604 C14
3605 D14
3607 D14
3608 F14
3610 F14
3611 G14
3612 G14
3613 H14
3616 E10
3617 F10
3618 F10
3619 G10
3620 G10
3621 H10
3622 H10
3623 I10
3624 A 2
3625 A 2
3642 J 9
3643 G 6
7600 A13
7601 E13
7602 D 8
7603 A 2

IN BLUE : ALTERNATIVE COMPONENTS

	DC548	DC578	DC668	DC688
2630		X		X
3643		X		X
2603	X	X		
3603	X	X		

22DC548/00
22DC578/00
22DC668/00
22DC688/00

INL	E9	LO_RR	A9
INR	E9	MRQ_D2B	B1
INREF_BCL	D9	RESET_DEV	B1
LO_FL	A9	SCL	D1
LO_FR	A9	SDA	D1
LO_RL	A9		

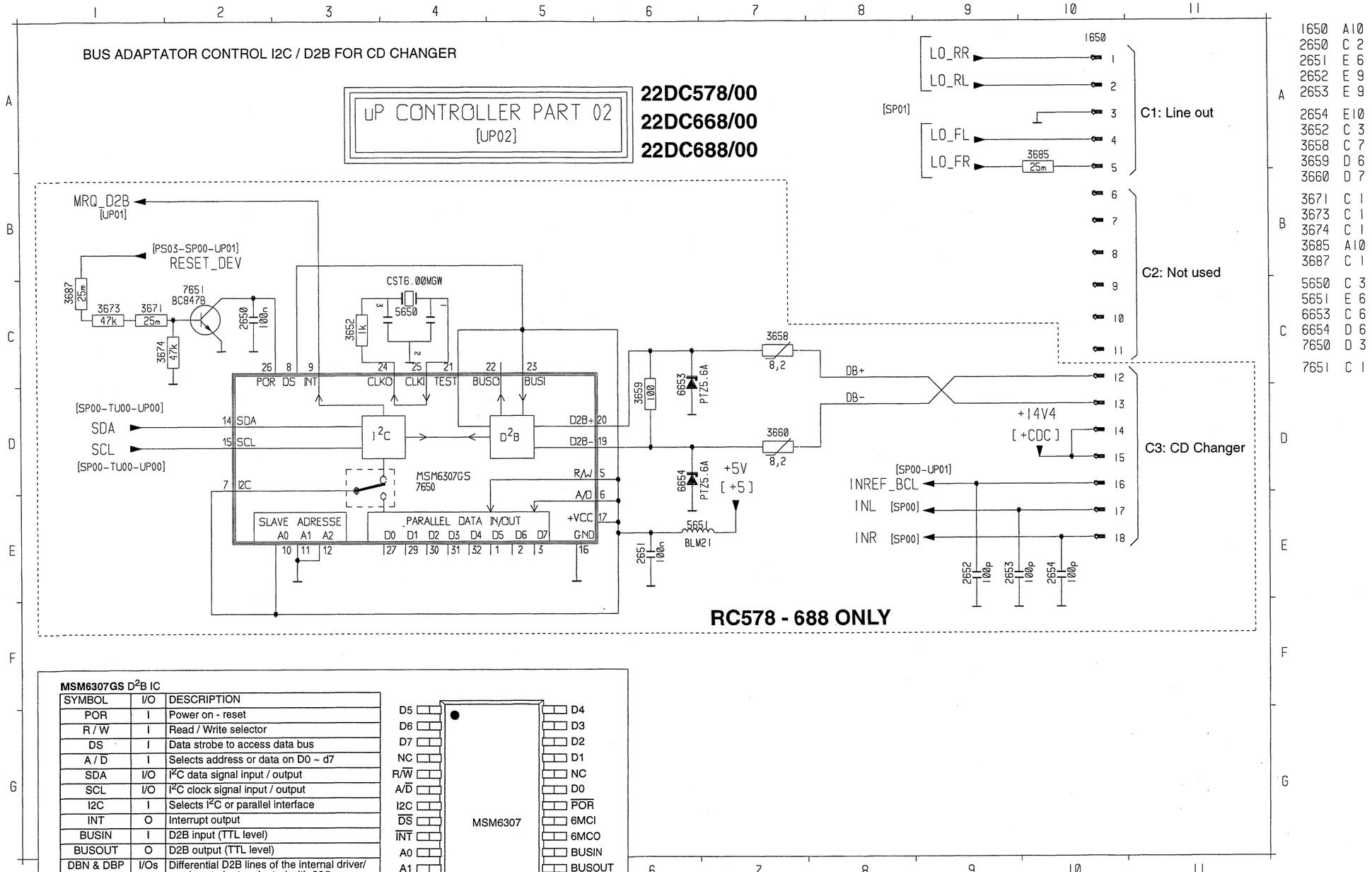

MSM6307GS D^2B IC

SYMBOL	I/O	DESCRIPTION
POR	I	Power on - reset
R / W	I	Read / Write selector
DS	I	Data strobe to access data bus
A / D	I	Selects address or data on D0 ~ d7
SDA	I/O	I^2C data signal input / output
SCL	I/O	I^2C clock signal input / output
I2C	I	Selects I^2C or parallel interface
INT	O	Interrupt output
BUSIN	I	D2B input (TTL level)
BUSOUT	O	D2B output (TTL level)
DBN & DBP	I/Os	Differential D2B lines of the internal driver/ receiver, to be terminated with 60Ω
TEST	I	Selects the test mode for factory purposes
6MCI	I	Clock input 6MHz resonator or X-TAL
6MCO	O	Clock output 6MHz resonator or X-TAL
D0 ~ D7	I/Os	8-bit bi-directional address or data bus
A0 ~ A2	I	Programmables I^2C slave addresses

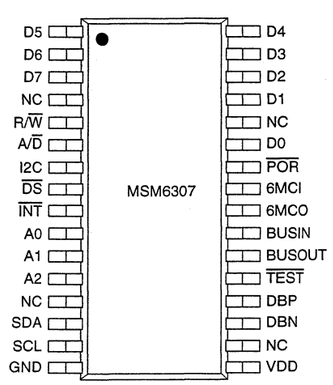

CASS_L E16
CASS_R A16
CD_CLOCK I7
CD_DATA I7
CD_MRQ I7
DEEMPHASIS J7
HEAD_TEA0677 ..... A8
LOADER G7
ME_FE_AUTO A14/K7
PLAY_SWITCH G10
RESET K7
SCA_CLOCK F3
SCA_DATA F3
SCA_ENABLE E3

TAPE PART
[TA00]

22DC548/00
22DC578/00
22DC668/00
22DC688/00

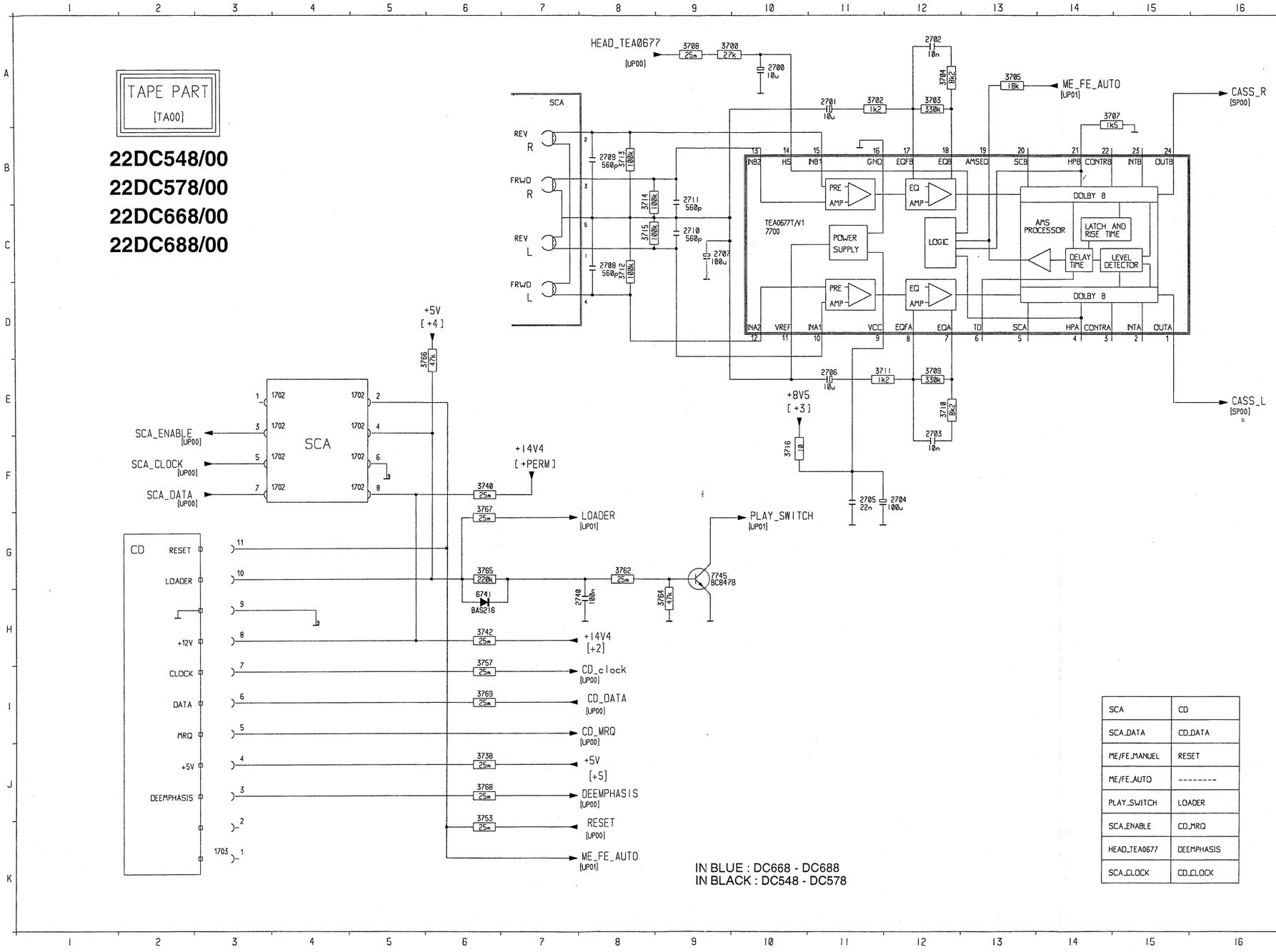

IN BLUE : DC668 - DC688
IN BLACK : DC548 - DC578

SCA	CD
SCA_DATA	CD_DATA
ME/FE_MANUEL	RESET
ME/FE_AUTO	--------
PLAY_SWITCH	LOADER
SCA_ENABLE	CD_MRQ
HEAD_TEA0677	DEEMPHASIS
SCA_CLOCK	CD_CLOCK

1702 F 5
1703 K 3
2700 A10
2701 A11
2702 A12
2703 F12
2704 F12
2705 F11
2706 E11
2707 C 9
2708 C 8
2709 B 8
2710 C 9
2711 B 9
2740 H 8
3700 A 9
3702 A11
3703 A12
3704 A12
3705 A13
3707 A14
3708 A 9
3709 E12
3710 E12
3711 E11
3712 C 8
3713 B 8
3714 B 8
3715 C 8
3716 F10
3738 J 6
3740 F 6
3742 H 6
3753 J 6
3757 H 6
3762 G 8
3764 H 9
3765 G 6
3766 E 5
3767 F 6
3768 J 6
3769 I 6
6741 H 6
7700 C10
7745 G 9

MAIN PWB LAYOUT. BOTTOM SIDE VIEW

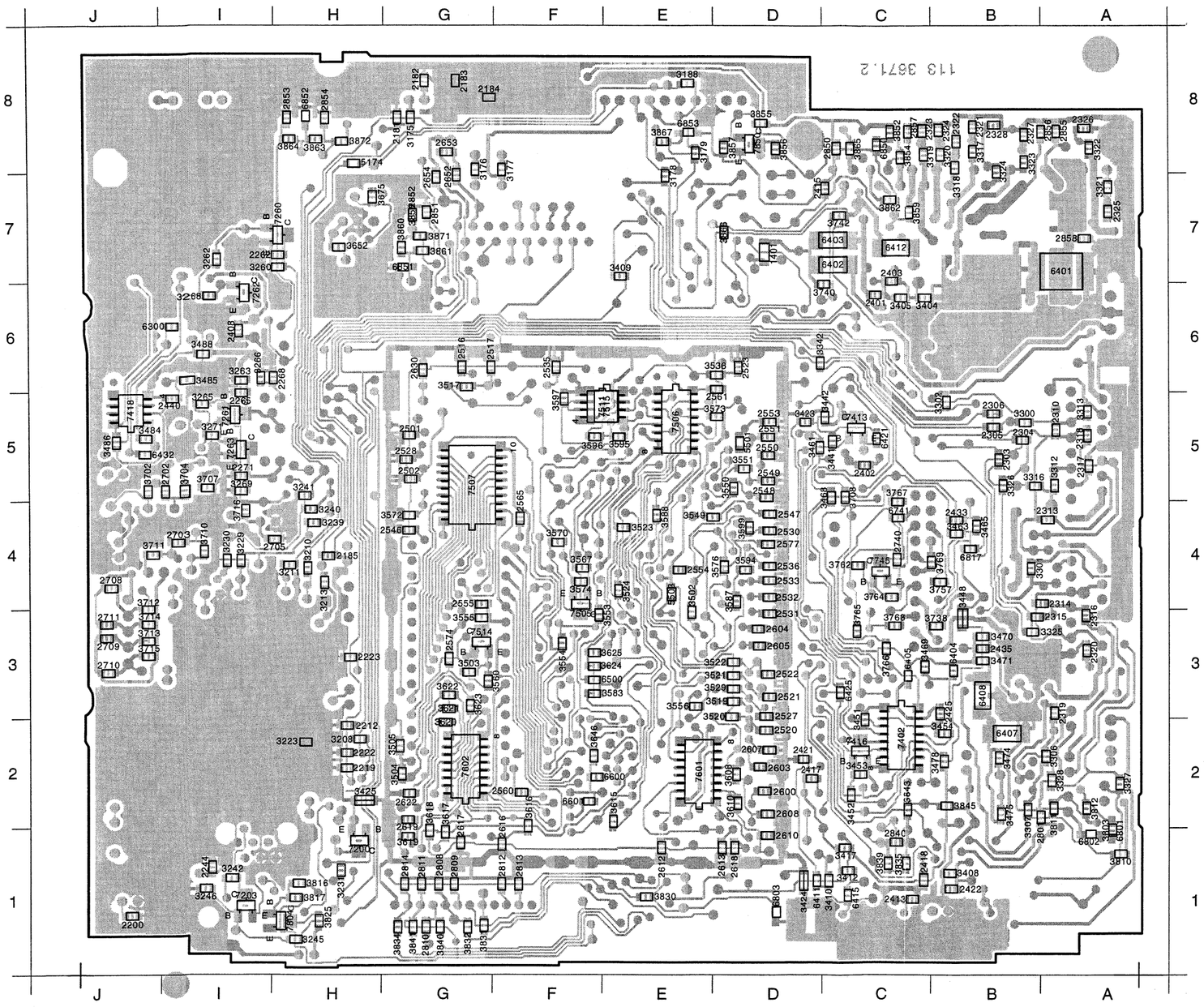

1401 D 7	2561 E 6	3301 B 4	3576 E 4	3866 E 7
2181 H 8	2565 F 5	3302 C 6	3583 F 3	3867 E 8
2182 G 8	2574 G 3	3306 B 2	3587 E 4	3871 G 7
2183 G 8	2577 D 4	3307 B 2	3588 E 5	3872 H 8
2184 G 8	2600 D 2	3312 B 5	3594 D 4	5174 H 8
2185 H 4	2603 D 2	3313 A 6	3595 F 5	5501 D 5
2200 J 1	2604 D 4	3316 B 5	3596 F 5	5503 E 4
2212 H 3	2605 D 3	3317 B 8	3597 F 6	6300 J 6
2219 H 2	2607 D 2	3318 C 8	3599 D 4	6401 B 7
2222 H 2	2608 D 2	3319 C 8	3608 E 2	6402 D 7
2223 H 3	2610 D 2	3320 C 8	3610 D 2	6403 D 7
2244 I 1	2612 E 2	3321 A 8	3615 F 2	6404 C 3
2262 I 7	2613 E 2	3322 A 8	3616 F 2	6405 C 3
2265 I 6	2616 G 2	3323 B 8	3617 G 2	6407 B 3
2268 I 6	2617 G 2	3324 B 8	3618 G 2	6408 B 3
2271 I 5	2618 E 2	3325 B 4	3619 G 2	6411 D 1
2303 B 5	2619 G 2	3326 B 5	3620 G 3	6412 C 7
2304 B 5	2622 G 2	3327 A 2	3621 G 3	6415 C 1
2305 B 5	2630 G 6	3328 B 2	3622 G 3	6421 C 5
2306 B 6	2652 G 8	3342 D 6	3623 G 3	6425 D 3
2310 B 5	2653 G 8	3404 C 7	3624 F 3	6432 J 5
2313 B 5	2654 G 8	3405 C 7	3625 F 3	6500 F 3
2314 B 4	2702 J 5	3408 C 1	3646 F 2	6600 F 2
2315 B 4	2703 J 4	3409 F 7	3652 H 7	6601 F 2
2316 A 4	2705 I 4	3410 D 1	3675 H 7	6741 C 5
2317 A 5	2708 J 4	3412 C 1	3702 J 5	6801 A 2
2318 A 5	2709 J 3	3417 D 2	3704 J 5	6802 A 2
2319 B 3	2710 J 3	3423 D 5	3707 I 5	6803 D 1
2320 A 3	2711 J 4	3424 D 1	3708 D 5	6817 B 4
2321 B 8	2740 C 4	3425 H 2	3710 I 4	6850 C 8
2322 B 8	2801 B 2	3441 D 5	3711 J 4	6851 H 7
2323 C 8	2808 G 1	3442 D 5	3712 J 4	6852 H 8
2324 C 8	2809 G 1	3448 B 4	3713 J 3	6853 E 8
2325 A 7	2810 G 1	3451 C 3	3714 J 4	7200 H 2
2326 A 8	2811 G 1	3452 C 2	3715 J 3	7203 I 1
2327 B 8	2812 G 1	3453 C 2	3716 I 5	7260 I 7
2328 B 8	2813 F 1	3454 C 3	3738 C 4	7261 I 6
2401 C 7	2814 H 1	3461 D 5	3740 D 7	7262 I 7
2402 C 5	2840 C 2	3463 B 4	3742 D 7	7263 I 5
2403 C 7	2850 D 8	3465 B 4	3757 C 4	7402 C 3
2408 I 6	2851 G 7	3468 D 5	3762 C 4	7413 C 5
2413 C 1	2852 G 7	3469 C 3	3764 C 4	7416 C 2
2415 D 8	2853 I 8	3470 B 3	3765 C 4	7418 J 6
2417 D 2	2854 H 8	3471 B 3	3766 C 3	7505 F 4
2418 C 1	2855 B 8	3474 B 2	3767 C 5	7506 E 5
2421 D 2	2856 B 8	3475 B 2	3768 C 4	7507 G 5
2422 C 1	2857 C 8	3478 C 2	3769 C 4	7511 F 6
2425 C 3	2858 A 7	3484 J 5	3803 A 2	7514 G 3
2433 B 5	3175 G 8	3485 I 6	3810 A 1	7515 F 6
2435 B 3	3176 G 8	3486 J 5	3811 B 2	7601 E 2
2440 J 6	3177 G 8	3488 I 6	3812 A 2	7602 G 2
2501 G 5	3178 E 8	3502 E 4	3816 H 1	7745 C 4
2502 G 5	3179 E 8	3503 G 3	3817 H 1	7804 I 1
2516 G 6	3188 E 8	3504 H 2	3825 H 1	7850 D 8
2517 G 6	3208 H 3	3505 H 2	3830 E 1	
2520 D 3	3210 H 4	3517 G 6	3831 G 1	
2521 D 3	3211 I 4	3519 E 3	3832 G 1	
2522 D 3	3213 H 4	3520 E 3	3834 H 1	
2523 D 6	3223 H 2	3521 E 3	3835 C 1	
2527 D 3	3229 I 4	3522 E 3	3839 C 1	
2528 H 5	3230 I 4	3523 F 4	3840 G 1	
2530 D 4	3231 H 1	3524 F 4	3841 G 1	
2531 D 4	3239 H 5	3529 E 3	3843 C 2	
2532 D 4	3240 H 5	3536 E 6	3845 C 2	
2533 D 4	3241 H 5	3549 E 5	3852 C 8	
2535 F 6	3242 I 1	3550 E 5	3854 C 8	
2536 D 4	3245 H 1	3551 D 5	3855 D 8	
2546 G 4	3246 I 1	3553 F 4	3856 D 8	
2547 D 5	3260 I 7	3554 F 3	3857 E 8	
2548 D 5	3262 I 7	3555 G 4	3858 G 7	
2549 D 5	3263 I 6	3556 E 3	3859 C 7	
2550 D 5	3265 I 6	3560 G 3	3860 H 7	
2551 D 5	3266 I 6	3567 F 4	3861 G 7	
2553 D 5	3268 I 7	3570 F 4	3862 C 7	
2554 E 4	3269 I 5	3572 G 5	3863 H 8	
2555 G 4	3271 I 5	3573 E 5	3864 I 8	
2560 F 2	3300 B 5	3574 F 4	3865 C 8	

B1 ..... C16
B2 ..... C16
B3 ..... D16
B4 ..... D16
B5 ..... I16
B6 ..... I16
B7 ..... J16
B8 ..... J16
FL H1
FR J1
POWER_MUTE B1
RL J1
RR I1
SI A5-A8-G8
TEMP_SENSE G1

22DC548/00
22DC578/00
22DC668/00
22DC688/00

POWER AMPLIFIER PART
[PA00]

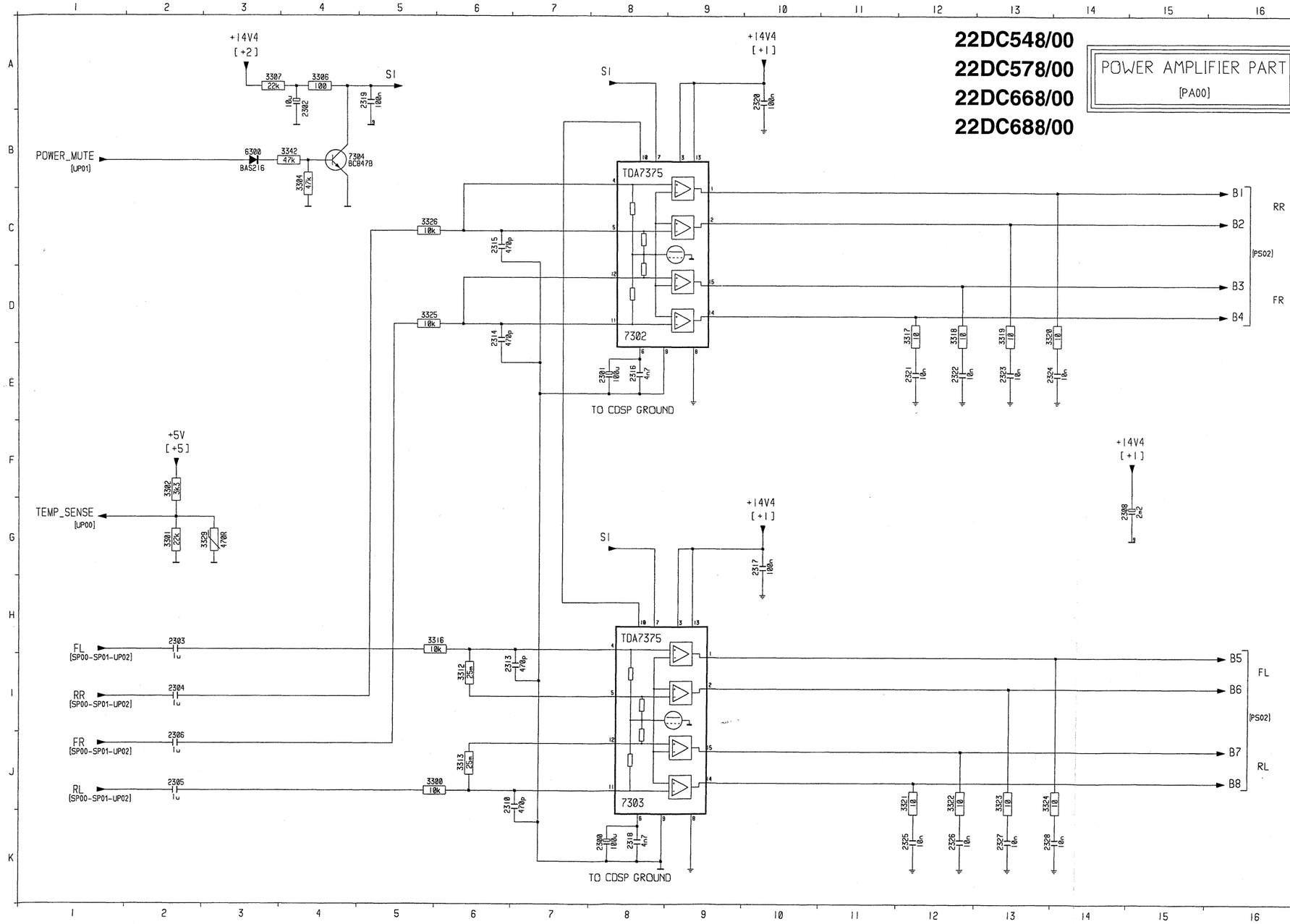

2300 K 8
2301 E 8
2302 A 4
2303 H 2
2304 I 2
2305 J 2
2306 J 2
2308 G14
2310 J 6
2313 I 6
2314 D 6
2315 C 6
2316 E 8
2317 G10
2318 K 8
2319 A 5
2320 A10
2321 E 9
2322 E10
2323 E10
2324 E11
2325 K16
2326 K15
2327 K15
2328 K14
3300 J 6
3301 G 2
3302 F 2
3304 B 4
3306 A 4
3307 A 3
3312 I 6
3313 J 6
3316 H 6
3317 D 9
3318 D10
3319 D10
3320 D11
3321 J16
3322 J15
3323 J15
3324 J14
3325 D 5
3326 C 5
3329 G 3
3342 B 4
6300 B 3
7302 D 8
7303 J 8
7304 B 4

22RC548/00 22RC578/00

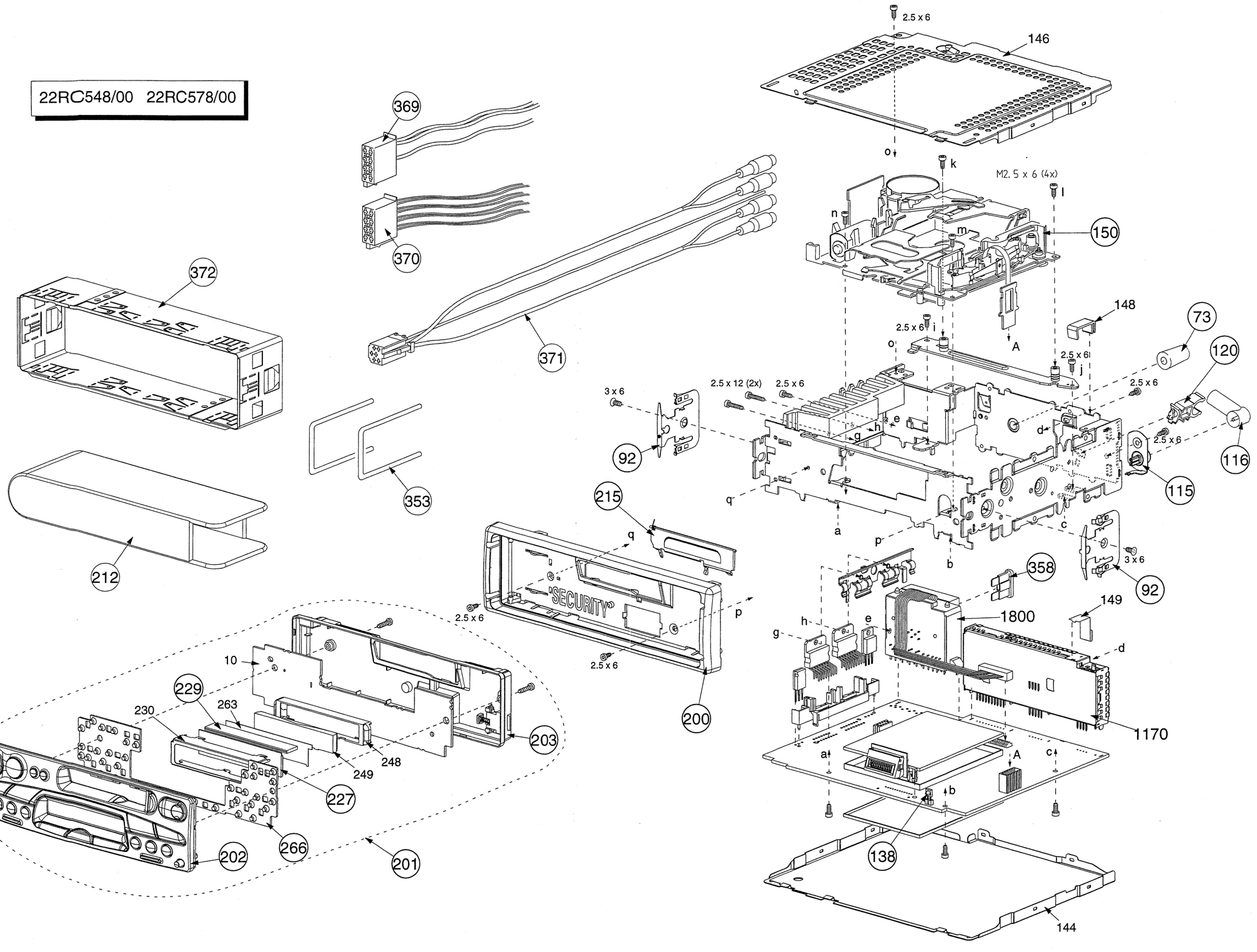

Mechanical partslist

Pos	Designation	Service code	548	578	668	688
73	Plastic holder	4822 532 11092	X	X	X	X
92	Fixing spring	4822 492 71046	X	X	X	X
115	Aerial bush assy	4822 265 10717	X	X	X	X
116	Aerial adaptor	4822 263 21164	X	X	X	X
120	Aerial adaptor holder	4822 256 10293	X	X	X	X
138	Blinking LED	4822 130 82996	X	X	X	X
170*	CDM9 car Loader	4822 691 10366			X	X
200	Fixed plate assy	4822 454 13145	X	X		
200	Fixed plate assy	4822 459 04316			X	X
201	Complete detachable front	4822 459 04334	X			
201	Complete detachable front	4822 459 04332		X		
201	Complete detachable front	4822 459 04331			X	
201	Complete detachable front	4822 459 04317				X
202	Cover front assy	4822 459 04335	X			
202	Cover front assy	4822 459 04333		X		
202	Cover front assy	4822 459 04329			X	
202	Cover front assy	4822 459 04318				X
203	Cover back assy	4822 442 00554	X	X		
203	Cover back assy	4822 426 10272			X	X
212	Box for detachable unit	4822 418 10123	X	X	X	X
215	Flap cassette printed	4822 443 10435	X			
215	Flap cassette printed	4822 443 10434		X		
227	LCD	4822 135 00013	X	X	X	X
229	Zebra connector	4822 267 10334	X	X	X	X
266	Switch mat	4822 410 10713	X	X		
266	Switch mat	4822 276 13791			X	X
353	Demounting brackets	4822 404 20437	X	X	X	X
355	Cable head CD3A	4822 320 11639			X	X
358	Fuse blade	4822 071 21003	X	X	X	X
369	Power supply cable	4822 321 11012	X	X	X	X
370	Loudspeakers cable	4822 320 11637	X	X	X	X
371	Line out cable	4822 320 11638		X	X	X
372	Sleeve	4822 443 30463	X	X	X	X
1800	Connector block	4822 265 10736	X			
1800	Connector block	4822 265 10716		X	X	X

* Item 170 is only the car loader (mechanical) part of the CD player.
For repair information about this car loader, please refer to Service manual 4822 725 23506 CD-mechanism CDM-9 MOD4, item 1002.

Opening the front:

Both parts (front and rear) are assembled by 2 screws and 10 locking clamps (arrows).
To unassemble these parts, first remove the screws and then use part A on the 4 sides as indicated on the drawing. Part A must be a thin plastic part.
This procedure is applicable also for CD front.
If you brake any part of the locking on the cover front, you must change the cover front. If not, it may cause further defaults like "button does not operate". . .

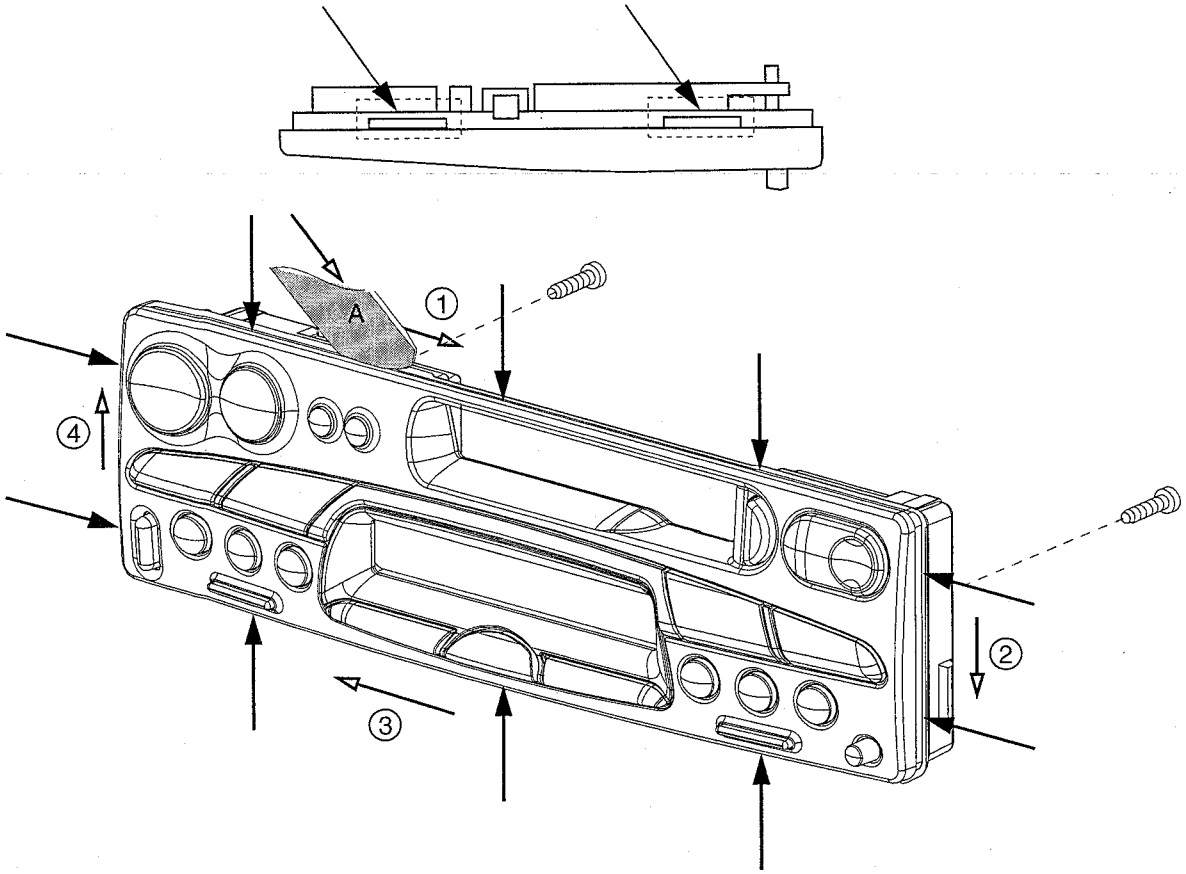

Position of the plastic spacers (22RC668/688 only):

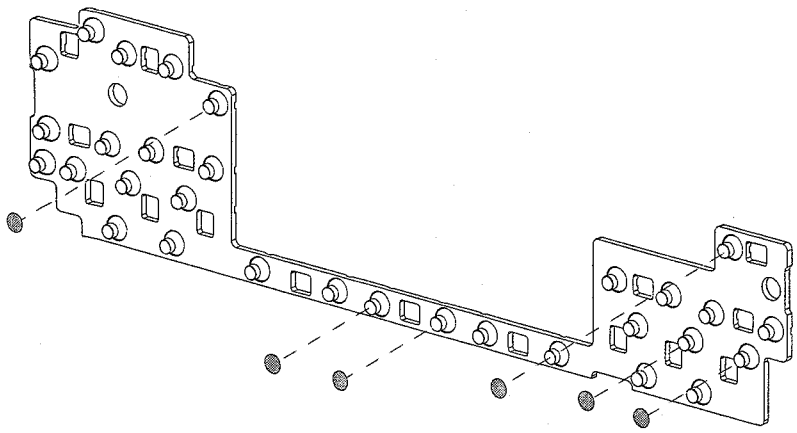

22RC668/00 22RC688/00

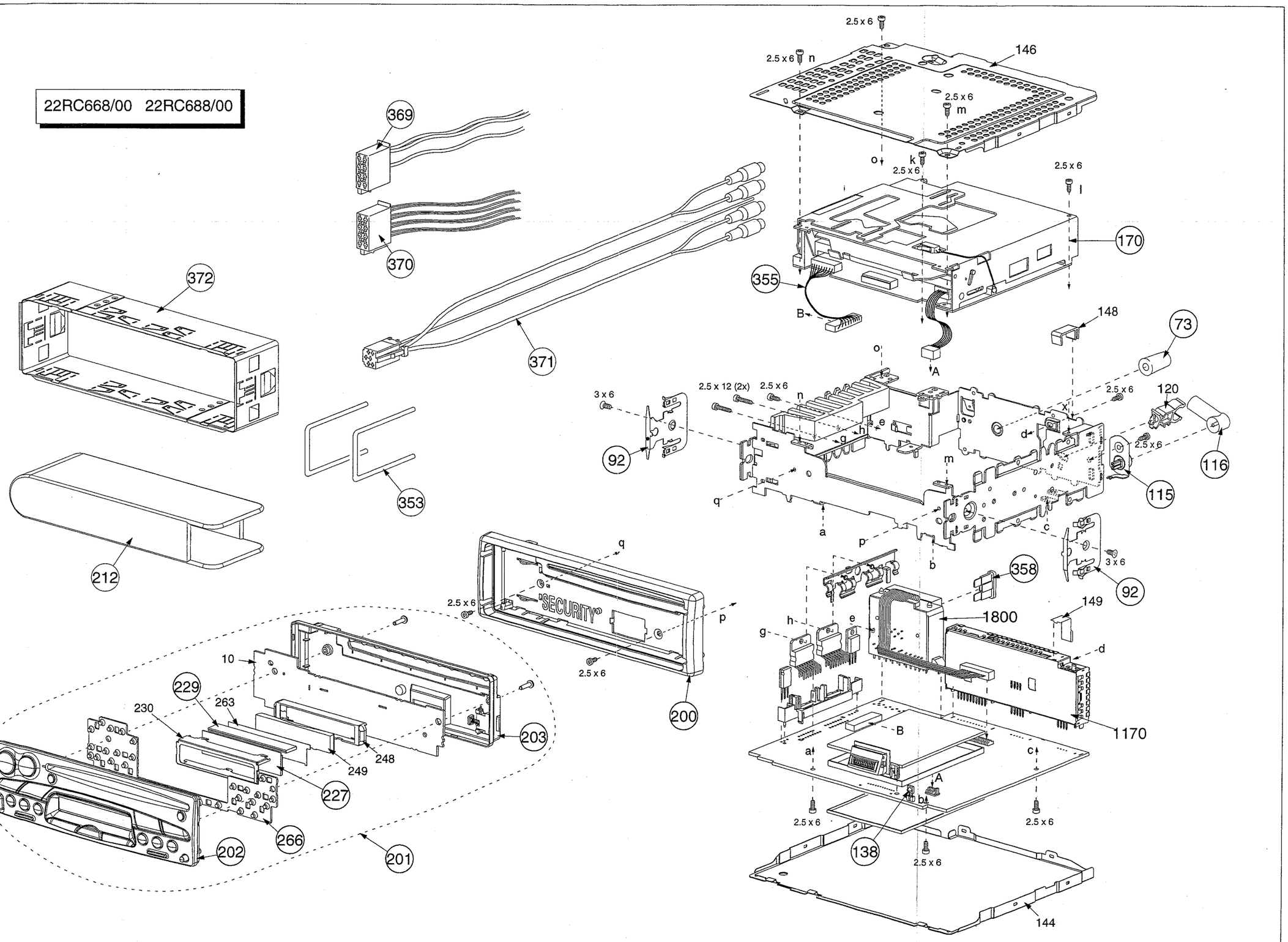

Miscellaneous		
1000	4822 691 10366	
1170	4822 210 10721	TUNER
1401	4822 252 51164	1.5A 32V (T)
1500	4822 242 10564	CSTCS16.00MX040-TC
1800	4822 265 10716	CONNECTOR BLOCK
1801	4822 256 30483	LAMP HOLDER
⊣⊢		
2182	5322 122 32654	22nF 10% X7R 63V
2183	5322 122 32654	22nF 10% X7R 63V
2200	4822 126 13196	100nF 10% X7R 25V
2202	5322 122 34123	1nF 10% X7R 50V
2204	4822 126 13849	220nF 10% 16V
2205	4822 126 13849	220nF 10% 16V
2206	5322 126 10223	4,7nF 10% X7R 63V
2207	5322 126 10223	4,7nF 10% X7R 63V
2208	5322 122 32531	100pF 5% NP0 50V
2209	4822 122 33342	33nF 10% X7R 63V
2210	4822 126 13849	220nF 10% 16V
2211	4822 126 13196	100nF 10% X7R 25V
2212	5322 122 34098	10nF 10% X7R 63V
2213	5322 122 34098	10nF 10% X7R 63V
2214	5322 122 31863	330pF 5% NP0 50V
2215	5322 122 33538	150pF 2% NP0 63V
2216	5322 122 31863	330pF 5% NP0 50V
2217	5322 122 34123	1nF 10% X7R 50V
2218	5322 122 34123	1nF 10% X7R 50V
2219	5322 122 34098	10nF 10% X7R 63V
2220	5322 122 34123	1nF 10% X7R 50V
2221	5322 122 34123	1nF 10% X7R 50V
2222	5322 122 34098	10nF 10% X7R 63V
2223	5322 122 34098	10nF 10% X7R 63V
2224	5322 122 34123	1nF 10% X7R 50V
2225	4822 126 13196	100nF 10% X7R 25V
2226	5322 122 34123	1nF 10% X7R 50V
2228	4822 126 13196	100nF 10% X7R 25V
2229	5322 122 32531	100pF 5% NP0 50V
2230	5322 122 32531	100pF 5% NP0 50V
2231	4822 126 13196	100nF 10% X7R 25V
2232	4822 126 13196	100nF 10% X7R 25V
2233	5322 122 31863	330pF 5% NP0 50V
2234	5322 122 31863	330pF 5% NP0 50V
2235	5322 122 34123	1nF 10% X7R 50V
2236	5322 122 34123	1nF 10% X7R 50V
2237	4822 124 23279	22µF 20% 16V
2238	4822 124 23582	220µF 10V
2239	4822 124 80453	100µF 20% 10V
2240	4822 124 23279	22µF 20% 16V
2241	4822 126 14043	1µF +80-20% 16V
2242	4822 124 23279	22µF 20% 16V
2243	4822 124 23282	1µF 20% 50V
2244	5322 122 34123	1nF 10% X7R 50V
2245	5322 122 32448	10pF 5% 50V
2246	5322 122 32448	10pF 5% 50V
2247	5322 122 34123	1nF 10% X7R 50V
2248	4822 122 33575	220pF 5%NPO 50V
2249	4822 122 33575	220pF 5%NPO 50V
2250	5322 122 32531	100pF 5% NP0 50V
2251	5322 122 32531	100pF 5% NP0 50V
2252	4822 126 13849	220nF 10% 16V

⊣⊢		
2253	4822 126 13849	220nF 10% 16V
2254	4822 126 13196	100nF 10% X7R 25V
2255	4822 124 23279	22µF 20% 16V
2256	4822 124 22646	47µF 20% 16V
2257	4822 126 14043	1µF +80-20% 16V
2258	4822 126 14043	1µF +80-20% 16V
2261	4822 124 41017	10µF 16V
2262	5322 122 34123	1nF 10% X7R 50V
2264	4822 124 41017	10µF 16V
2265	5322 122 34123	1nF 10% X7R 50V
2267	4822 124 41017	10µF 16V
2268	5322 122 34123	1nF 10% X7R 50V
2270	4822 124 41017	10µF 16V
2271	5322 122 34123	1nF 10% X7R 50V
2300	4822 124 80453	100µF 20% 10V
2301	4822 124 80453	100µF 20% 10V
2302	4822 124 41017	10µF 16V
2303	4822 126 14043	1µF +80-20% 16V
2304	4822 126 14043	1µF +80-20% 16V
2305	4822 126 14043	1µF +80-20% 16V
2306	4822 126 14043	1µF +80-20% 16V
2308	4822 124 80769	2200µF 20% 16V
2310	5322 122 32268	470pF 10% 50V
2313	5322 122 32268	470pF 10% 50V
2314	5322 122 32268	470pF 10% 50V
2315	5322 122 32268	470pF 10% 50V
2316	5322 126 10223	4,7nF 10% X7R 63V
2317	4822 126 13196	100nF 10% X7R 25V
2318	5322 126 10223	4,7nF 10% X7R 63V
2319	4822 126 13196	100nF 10% X7R 25V
2320	4822 126 13196	100nF 10% X7R 25V
2321	5322 122 34098	10nF 10% X7R 63V
2322	5322 122 34098	10nF 10% X7R 63V
2323	5322 122 34098	10nF 10% X7R 63V
2324	5322 122 34098	10nF 10% X7R 63V
2325	5322 122 34098	10nF 10% X7R 63V
2326	5322 122 34098	10nF 10% X7R 63V
2327	5322 122 34098	10nF 10% X7R 63V
2328	5322 122 34098	10nF 10% X7R 63V
2401	5322 126 10223	4,7nF 10% X7R 63V
2402	4822 122 33342	33nF 10% X7R 63V
2404	4822 124 41017	10µF 16V
2405	4822 124 80769	2200µF 20% 16V
2407	5322 122 32268	470pF 10% 50V
2408	4822 126 13849	220nF 10% 16V
2409	4822 126 13849	220nF 10% 16V
2410	4822 124 80766	1000µF 20% 25V
2411	4822 124 80453	100µF 20% 10V
2412	4822 124 23281	33µF 20% 16V
2413	5322 122 32654	22nF 10% X7R 63V
2414	4822 124 23282	1µF 20% 50V
2415	4822 122 33575	220pF 5%NPO 50V
2416	4822 124 23281	33µF 20% 16V
2417	4822 126 14043	1µF +80-20% 16V
2418	4822 126 13849	220nF 10% 16V
2419	5322 126 10223	4,7nF 10% X7R 63V
2420	4822 126 13196	100nF 10% X7R 25V
2421	4822 126 14043	1µF +80-20% 16V
2425	4822 122 33342	33nF 10% X7R 63V
2428	5322 122 34098	10nF 10% X7R 63V

⊣⊢		
2429	5322 122 34098	10nF 10% X7R 63V
2432	5322 122 34098	10nF 10% X7R 63V
2433	5322 122 34098	10nF 10% X7R 63V
2440	5322 122 32654	22nF 10% X7R 63V
2501	5322 122 34123	1nF 10% X7R 50V
2516	5322 122 33869	15pF 5% NP0 63V
2517	5322 122 33869	15pF 5% NP0 63V
2518	5322 122 32531	100pF 5% NP0 50V
2520	5322 122 34123	1nF 10% X7R 50V
2521	5322 122 34123	1nF 10% X7R 50V
2522	5322 122 34123	1nF 10% X7R 50V
2523	5322 122 33869	15pF 5% NP0 63V
2524	5322 122 33869	15pF 5% NP0 63V
2525	5322 122 34123	1nF 10% X7R 50V
2527	5322 122 34123	1nF 10% X7R 50V
2529	5322 122 34123	1nF 10% X7R 50V
2530	5322 122 34123	1nF 10% X7R 50V
2531	5322 122 34123	1nF 10% X7R 50V
2532	5322 122 34123	1nF 10% X7R 50V
2533	5322 122 34123	1nF 10% X7R 50V
2535	5322 122 34123	1nF 10% X7R 50V
2536	5322 122 34123	1nF 10% X7R 50V
2541	5322 122 34123	1nF 10% X7R 50V
2543	5322 122 34123	1nF 10% X7R 50V
2544	5322 122 34123	1nF 10% X7R 50V
2546	5322 122 34123	1nF 10% X7R 50V
2549	5322 122 34123	1nF 10% X7R 50V
2550	5322 122 34123	1nF 10% X7R 50V
2551	4822 126 13196	100nF 10% X7R 25V
2552	4822 126 13196	100nF 10% X7R 25V
2554	4822 126 13196	100nF 10% X7R 25V
2555	5322 126 10223	4,7nF 10% X7R 63V
2561	5322 122 34098	10nF 10% X7R 63V
2565	5322 122 34098	10nF 10% X7R 63V
2574	5322 122 34098	10nF 10% X7R 63V
2577	4822 122 33342	33nF 10% X7R 63V
2578	4822 126 13196	100nF 10% X7R 25V
2600	5322 122 34123	1nF 10% X7R 50V
2601	5322 122 34123	1nF 10% X7R 50V
2603	5322 122 34123	1nF 10% X7R 50V
2604	5322 122 34123	1nF 10% X7R 50V
2605	5322 122 34123	1nF 10% X7R 50V
2607	5322 122 34123	1nF 10% X7R 50V
2608	5322 122 34123	1nF 10% X7R 50V
2610	5322 122 34123	1nF 10% X7R 50V
2611	5322 122 34123	1nF 10% X7R 50V
2612	5322 122 34123	1nF 10% X7R 50V
2613	5322 122 34123	1nF 10% X7R 50V
2614	5322 122 33869	15pF 5% NP0 63V
2615	5322 122 33869	15pF 5% NP0 63V
2616	5322 122 34123	1nF 10% X7R 50V
2617	5322 122 34123	1nF 10% X7R 50V
2618	5322 122 34123	1nF 10% X7R 50V
2619	5322 122 34123	1nF 10% X7R 50V
2620	5322 122 34123	1nF 10% X7R 50V
2621	5322 122 34123	1nF 10% X7R 50V
2622	5322 122 34123	1nF 10% X7R 50V
2623	5322 122 34123	1nF 10% X7R 50V
2630	5322 122 34123	1nF 10% X7R 50V
2650	4822 126 13196	100nF 10% X7R 25V

⊣⊢		
2651	4822 126 13196	100nF 10% X7R 25V
2652	5322 122 32531	100pF 5% NP0 50V
2653	5322 122 32531	100pF 5% NP0 50V
2654	5322 122 32531	100pF 5% NP0 50V
2700	4822 124 41017	10µF 16V
2701	4822 124 41017	10µF 16V
2702	5322 122 34098	10nF 10% X7R 63V
2703	5322 122 34098	10nF 10% X7R 63V
2704	4822 124 80453	100µF 20% 10V
2705	5322 122 32654	22nF 10% X7R 63V
2706	4822 124 41017	10µF 16V
2707	4822 124 80453	100µF 20% 10V
2708	5322 116 80853	560pF 5% 50V
2709	5322 116 80853	560pF 5% 50V
2710	5322 116 80853	560pF 5% 50V
2711	5322 116 80853	560pF 5% 50V
2740	4822 126 13196	100nF 10% X7R 25V
2801	5322 122 34098	10nF 10% X7R 63V
2802	4822 124 41017	10µF 16V
2808	5322 122 32268	470pF 10% 50V
2809	5322 122 32268	470pF 10% 50V
2810	5322 122 32268	470pF 10% 50V
2811	5322 122 32268	470pF 10% 50V
2812	5322 122 32268	470pF 10% 50V
2813	5322 122 32268	470pF 10% 50V
2814	5322 122 32268	470pF 10% 50V
2835	4822 122 33128	15nF 10% X7R 63V
2836	5322 122 32654	22nF 10% X7R 63V
2837	4822 126 13693	56pF 1% NP0 63V
2838	5322 122 32452	47pF 5% NP0 63V
2850	5322 122 34123	1nF 10% X7R 50V
2853	5322 122 34123	1nF 10% X7R 50V
2854	5322 122 34098	10nF 10% X7R 63V
2855	5322 122 32531	100pF 5% NP0 50V
2856	5322 122 32531	100pF 5% NP0 50V
2857	4822 122 33575	220pF 5%NPO 50V
2858	5322 122 32531	100pF 5% NP0 50V
⊣□⊢		
3175	4822 051 20102	1KΩ 5% 0,1W
3178	4822 051 20008	0Ω JUMP. (0805)
3179	4822 051 20008	0Ω JUMP. (0805)
3201	4822 051 20273	27KΩ 5% 0,1W
3202	4822 051 20273	27KΩ 5% 0,1W
3203	4822 117 11449	2K2 5% RC11
3204	4822 117 11449	2K2 5% RC11
3205	4822 117 10833	10K 1% 0,1W
3206	4822 051 20221	220Ω 5% 0,1W
3207	4822 051 20101	100Ω 5% 0,1W
3208	4822 051 20101	100Ω 5% 0,1W
3209	4822 051 20104	100KΩ 5% 0,1W
3210	4822 051 20332	3K30 5% 0,1W
3211	4822 051 20332	3K30 5% 0,1W
3212	4822 117 10833	10K 1% 0,1W
3213	4822 051 20562	5K60 5% 0,1W
3214	4822 051 20101	100Ω 5% 0,1W
3215	4822 051 20008	0Ω JUMP. (0805)
3216	4822 051 20272	2K70 5% 0,1W
3217	4822 051 20101	100Ω 5% 0,1W

3218	4822 051 20272	2K70 5% 0,1W	3417	4822 051 20154	150KΩ 5% 0,1W
3219	4822 051 20272	2K70 5% 0,1W	3421	4822 051 20008	0Ω JUMP. (0805)
3220	4822 051 20101	100Ω 5% 0,1W	3422	4822 051 20104	100KΩ 5% 0,1W
3221	4822 051 20101	100Ω 5% 0,1W	3423	4822 051 20104	100KΩ 5% 0,1W
3222	4822 051 20272	2K70 5% 0,1W	3424	4822 051 10008	0Ω 5% 0,25W
3223	4822 051 20183	18KΩ 5% 0,1W	3425	4822 051 10008	0Ω 5% 0,25W
3224	4822 051 20102	1KΩ 5% 0,1W	3427	4822 051 20008	0Ω 5% 0,25W
3226	4822 051 20221	220Ω 5% 0,1W	3430	4822 051 20109	10Ω 5% 0,1W
3227	4822 051 20221	220Ω 5% 0,1W	3431	4822 051 20473	47KΩ 5% 0,1W
3228	4822 051 20273	27KΩ 5% 0,1W	3432	4822 051 20473	47KΩ 5% 0,1W
3229	4822 051 20472	4K70 5% 0,1W	3433	4822 051 20473	47KΩ 5% 0,1W
3230	4822 051 20472	4K70 5% 0,1W	3441	4822 051 20473	47KΩ 5% 0,1W
3231	4822 117 10833	10K 1% 0,1W	3442	4822 051 20224	220KΩ 5% 0,1W
3232	4822 051 20008	0Ω JUMP. (0805)	3444	4822 051 20105	1M00 5% 0,1W
3233	4822 051 20008	0Ω JUMP. (0805)	3445	4822 051 20105	1M00 5% 0,1W
3234	4822 051 20221	220Ω 5% 0,1W	3447	4822 051 20224	220KΩ 5% 0,1W
3235	4822 051 20221	220Ω 5% 0,1W	3448	4822 051 10008	0Ω 5% 0,25W
3236	4822 051 20101	100Ω 5% 0,1W	3449	4822 051 20224	220KΩ 5% 0,1W
3237	4822 051 20008	0Ω JUMP. (0805)	3451	4822 051 20224	220KΩ 5% 0,1W
3241	4822 051 20105	1M00 5% 0,1W	3452	4822 051 20224	220KΩ 5% 0,1W
3242	4822 117 10833	10K 1% 0,1W	3453	4822 051 20104	100KΩ 5% 0,1W
3245	4822 117 10833	10K 1% 0,1W	3454	4822 051 20224	220KΩ 5% 0,1W
3246	4822 117 10833	10K 1% 0,1W	3456	4822 051 20008	0Ω JUMP. (0805)
3260	4822 051 20223	22KΩ 5% 0,1W	3458	4822 051 20104	100KΩ 5% 0,1W
3262	4822 051 20182	1K80 5% 0,1W	3460	4822 117 10833	10K 1% 0,1W
3263	4822 051 20223	22KΩ 5% 0,1W	3461	4822 051 20008	0Ω JUMP. (0805)
3265	4822 051 20182	1K80 5% 0,1W	3463	4822 051 20224	220KΩ 5% 0,1W
3266	4822 051 20223	22KΩ 5% 0,1W	3464	4822 051 20224	220KΩ 5% 0,1W
3268	4822 051 20182	1K80 5% 0,1W	3465	4822 117 10833	10K 1% 0,1W
3269	4822 051 20223	22KΩ 5% 0,1W	3468	4822 051 20008	0Ω JUMP. (0805)
3271	4822 051 20182	1K80 5% 0,1W	3470	4822 051 20104	100KΩ 5% 0,1W
3300	4822 117 10833	10K 1% 0,1W	3471	4822 051 20224	220KΩ 5% 0,1W
3301	4822 051 20223	22KΩ 5% 0,1W	3472	4822 051 20102	1KΩ 5% 0,1W
3302	4822 051 20332	3K30 5% 0,1W	3473	4822 051 20473	47KΩ 5% 0,1W
3304	4822 051 20473	47KΩ 5% 0,1W	3474	4822 051 20109	10Ω 5% 0,1W
3306	4822 051 20101	100Ω 5% 0,1W	3475	4822 051 20109	10Ω 5% 0,1W
3307	4822 051 20223	22KΩ 5% 0,1W	3477	4822 051 20109	10Ω 5% 0,1W
3312	4822 051 20008	0Ω JUMP. (0805)	3478	4822 051 20223	22KΩ 5% 0,1W
3313	4822 051 20008	0Ω JUMP. (0805)	3484	4822 051 20224	220KΩ 5% 0,1W
3316	4822 117 10833	10K 1% 0,1W	3485	4822 051 20224	220KΩ 5% 0,1W
3317	4822 051 20109	10Ω 5% 0,1W	3486	4822 051 20273	27KΩ 5% 0,1W
3318	4822 051 20109	10Ω 5% 0,1W	3488	4822 117 10833	10K 1% 0,1W
3319	4822 051 20109	10Ω 5% 0,1W	3500	4822 051 20101	100Ω 5% 0,1W
3320	4822 051 20109	10Ω 5% 0,1W	3502	4822 051 20008	0Ω JUMP. (0805)
3321	4822 051 20109	10Ω 5% 0,1W	3503	4822 051 20472	4K70 5% 0,1W
3322	4822 051 20109	10Ω 5% 0,1W	3504	4822 051 20008	0Ω JUMP. (0805)
3323	4822 051 20109	10Ω 5% 0,1W	3516	4822 051 20101	100Ω 5% 0,1W
3324	4822 051 20109	10Ω 5% 0,1W	3517	4822 051 20101	100Ω 5% 0,1W
3325	4822 117 10833	10K 1% 0,1W	3518	4822 051 20109	10Ω 5% 0,1W
3326	4822 117 10833	10K 1% 0,1W	3520	4822 051 20101	100Ω 5% 0,1W
3329	4822 116 40255	470R 50% PTC 16V	3521	4822 051 20101	100Ω 5% 0,1W
3342	4822 051 20473	47KΩ 5% 0,1W	3522	4822 051 20101	100Ω 5% 0,1W
3404	4822 051 20224	220KΩ 5% 0,1W	3523	4822 051 20472	4K70 5% 0,1W
3405	4822 051 20104	100KΩ 5% 0,1W	3524	4822 051 20472	4K70 5% 0,1W
3406	4822 051 20154	150KΩ 5% 0,1W	3525	4822 051 20473	47KΩ 5% 0,1W
3408	4822 051 20273	27KΩ 5% 0,1W	3526	4822 051 20473	47KΩ 5% 0,1W
3410	4822 051 20473	47KΩ 5% 0,1W	3529	4822 051 20101	100Ω 5% 0,1W
3411	4822 051 20473	47KΩ 5% 0,1W	3531	4822 051 20101	100Ω 5% 0,1W
3412	4822 051 20101	100Ω 5% 0,1W	3533	4822 051 20101	100Ω 5% 0,1W
3414	4822 116 40267	3R3 25% 20V	3534	4822 051 20101	100Ω 5% 0,1W

3535	4822 051 20101	100Ω 5% 0,1W	3624	4822 051 20223	22KΩ 5% 0,1W
3536	4822 051 20101	100Ω 5% 0,1W	3625	4822 051 20223	22KΩ 5% 0,1W
3537	4822 051 20101	100Ω 5% 0,1W	3642	4822 117 10833	10K 1% 0,1W
3538	4822 051 20101	100Ω 5% 0,1W	3643	4822 051 20101	100Ω 5% 0,1W
3543	4822 051 20101	100Ω 5% 0,1W	3652	4822 051 20102	1KΩ 5% 0,1W
3545	4822 051 20101	100Ω 5% 0,1W	3658	4822 116 40221	8R2 20%
3546	4822 051 20223	22KΩ 5% 0,1W	3659	4822 051 20101	100Ω 5% 0,1W
3548	4822 051 20101	100Ω 5% 0,1W	3660	4822 116 40221	8R2 20%
3551	4822 051 20101	100Ω 5% 0,1W	3671	4822 051 20008	0Ω JUMP
3552	4822 051 20101	100Ω 5% 0,1W	3673	4822 051 20473	47KΩ 5% 0,1W
3553	4822 051 20008	0Ω JUMP. (0805)	3674	4822 051 20473	47KΩ 5% 0,1W
3555	4822 051 20473	47KΩ 5% 0,1W	3685	4822 051 20008	0Ω JUMP. (0805)
3556	4822 051 20224	220KΩ 5% 0,1W	3687	4822 051 20008	0Ω JUMP. (0805)
3557	4822 051 20473	47KΩ 5% 0,1W	3700	4822 051 20273	27KΩ 5% 0,1W
3558	4822 051 20473	47KΩ 5% 0,1W	3702	4822 051 20122	1K2 5% 0,1W
3560	4822 051 20224	220KΩ 5% 0,1W	3703	4822 051 20334	330KΩ 5% 0,1W
3567	4822 051 20224	220KΩ 5% 0,1W	3704	4822 051 20822	8K2 5% 0,1W
3568	4822 051 20101	100Ω 5% 0,1W	3705	4822 051 20183	18KΩ 5% 0,1W
3569	4822 051 20273	27KΩ 5% 0,1W	3707	4822 117 11139	1k5 5% 0,1W
3571	4822 051 20471	470Ω 5% 0,1W	3708	4822 051 20008	0Ω JUMP. (0805)
3572	4822 051 20104	100KΩ 5% 0,1W	3709	4822 051 20334	330KΩ 5% 0,1W
3573	4822 051 20109	10Ω 5% 0,1W	3710	4822 051 20822	8K2 5% 0,1W
3574	4822 051 20224	220KΩ 5% 0,1W	3711	4822 051 20122	1K2 5% 0,1W
3576	4822 051 20223	22KΩ 5% 0,1W	3712	4822 051 20104	100KΩ 5% 0,1W
3578	4822 051 20223	22KΩ 5% 0,1W	3713	4822 051 20104	100KΩ 5% 0,1W
3579	4822 051 20223	22KΩ 5% 0,1W	3714	4822 051 20104	100KΩ 5% 0,1W
3580	4822 051 20223	22KΩ 5% 0,1W	3715	4822 051 20104	100KΩ 5% 0,1W
3583	4822 051 20223	22KΩ 5% 0,1W	3716	4822 051 20109	10Ω 5% 0,1W
3587	4822 051 20223	22KΩ 5% 0,1W	3738	4822 051 20008	0Ω JUMP. (0805)
3588	4822 117 10833	10K 1% 0,1W	3740	4822 051 20008	0Ω JUMP. (0805)
3589	4822 117 10833	10K 1% 0,1W	3742	4822 051 20008	0Ω JUMP. (0805)
3591	4822 051 20223	22KΩ 5% 0,1W	3753	4822 051 20008	0Ω JUMP. (0805)
3592	4822 051 20223	22KΩ 5% 0,1W	3757	4822 051 20008	0Ω JUMP. (0805)
3593	4822 051 20223	22KΩ 5% 0,1W	3762	4822 051 20008	0Ω JUMP. (0805
3595	4822 051 20473	47KΩ 5% 0,1W	3764	4822 051 20473	47KΩ 5% 0,1W
3596	4822 051 20473	47KΩ 5% 0,1W	3765	4822 051 20224	220KΩ 5% 0,1W
3597	4822 051 20102	1KΩ 5% 0,1W	3766	4822 051 20473	47KΩ 5% 0,1W
3598	4822 051 20101	100Ω 5% 0,1W	3767	4822 051 20008	0Ω JUMP. (0805)
3599	4822 051 20101	100Ω 5% 0,1W	3768	4822 051 20008	0Ω JUMP. (0805)
3600	4822 051 20101	100Ω 5% 0,1W	3769	4822 051 20008	0Ω JUMP. (0805)
3601	4822 051 20101	100Ω 5% 0,1W	3802	4822 051 20008	0Ω JUMP. (0805)
3603	4822 051 20101	100Ω 5% 0,1W	3803	4822 051 20008	0Ω JUMP. (0805)
3604	4822 051 20101	100Ω 5% 0,1W	3804	4822 051 20008	0Ω JUMP. (0805)
3605	4822 051 20101	100Ω 5% 0,1W	3810	4822 051 20008	0Ω JUMP. (0805)
3607	4822 051 20101	100Ω 5% 0,1W	3811	4822 051 20561	560Ω 5% 0,1W
3608	4822 051 20101	100Ω 5% 0,1W	3812	4822 051 20101	100Ω 5% 0,1W
3610	4822 051 20101	100Ω 5% 0,1W	3813	4822 117 10833	10K 1% 0,1W
3611	4822 051 20101	100Ω 5% 0,1W	3814	4822 051 20008	0Ω JUMP. (0805)
3612	4822 051 20101	100Ω 5% 0,1W	3815	4822 051 20473	47KΩ 5% 0,1W
3613	4822 051 20101	100Ω 5% 0,1W	3816	4822 051 20473	47KΩ 5% 0,1W
3614	4822 051 20101	100Ω 5% 0,1W	3817	4822 051 20473	47KΩ 5% 0,1W
3615	4822 051 20101	100Ω 5% 0,1W	3825	4822 051 20331	330Ω 5% 0,1W
3616	4822 051 20101	100Ω 5% 0,1W	3830	4822 051 20221	220Ω 5% 0,1W
3617	4822 051 20101	100Ω 5% 0,1W	3831	4822 051 20221	220Ω 5% 0,1W
3618	4822 051 20101	100Ω 5% 0,1W	3832	4822 051 20331	330Ω 5% 0,1W
3619	4822 051 20101	100Ω 5% 0,1W	3834	4822 051 20102	1KΩ 5% 0,1W
3620	4822 051 20101	100Ω 5% 0,1W	3835	4822 117 11449	2K2 1% 0,1W
3621	4822 051 20101	100Ω 5% 0,1W	3836	4822 051 20104	100KΩ 5% 0,1W
3622	4822 051 20101	100Ω 5% 0,1W	3837	4822 051 20102	1KΩ 5% 0,1W
3623	4822 051 20101	100Ω 5% 0,1W	3838	4822 051 20102	1KΩ 5% 0,1W

3839	4822 051 20105	1M00 5% 0,1W
3840	4822 051 20102	1KΩ 5% 0,1W
3841	4822 051 20102	1KΩ 5% 0,1W
3845	4822 051 20008	0Ω JUMP. (0805)
3850	4822 051 20101	100Ω 5% 0,1W
3852	4822 117 10833	10KΩ 1% 0,1W
3854	4822 051 20008	0Ω JUMP. (0805)
3855	4822 051 20104	100KΩ 5% 0,1W
3856	4822 117 10833	10KΩ 1% 0,1W
3857	4822 051 20333	33KΩ 5% 0,1W
3858	4822 051 20008	0Ω JUMP. (0805)
3863	4822 051 20101	100Ω 5% 0,1W
3864	4822 051 20104	100KΩ 5% 0,1W
3865	4822 051 20101	100Ω 5% 0,1W
3866	4822 051 20101	100Ω 5% 0,1W
3867	4822 051 20471	470Ω 5% 0,1W
3871	4822 051 20008	0Ω JUMP. (0805)
3872	4822 051 20101	100Ω 5% 0,1W

5172	4822 157 10975	120UH 10%
5173	4822 157 10976	68UH 10%
5174	4822 157 71206	BLM21A10PT
5200	4822 157 71206	BLM21A10PT
5201	4822 242 10565	K1101-36.860MHZ
5202	4822 157 71184	10UH 10%
5203	4822 157 10976	68UH 10%
5204	4822 157 71206	BLM21A10PT
5205	4822 157 10977	4,7UH 10%
5400	4822 157 70935	COIL
5401	4822 157 11072	LALO4 0U22 BEND.17,78
5402	4822 157 71184	10UH 10%
5403	4822 157 71184	10UH 10%
5501	4822 157 71206	BLM21A10PT
5503	4822 157 71206	BLM21A10PT
5650	4822 242 81002	CST6,00MGW-TF01
5651	4822 157 71206	BLM21A10PT
5835	4822 242 81583	LN-G8-238

6200	4822 130 10654	BAT254
6300	4822 130 83757	BAS216
6401	4822 130 10488	S3G
6402	4822 130 10655	1SR154-400
6403	4822 130 10655	1SR154-400
6406	4822 130 10656	UDZ20B
6407	4822 130 10655	1SR154-400
6408	4822 130 10655	1SR154-400
6411	4822 130 10654	BAT254
6412	4822 130 10655	1SR154-400
6413	4822 130 10654	BAT254
6414	4822 130 83757	BAS216
6415	4822 130 83757	BAS216
6418	4822 130 83757	BAS216
6421	4822 130 83757	BAS216
6425	4822 130 83757	BAS216
6426	4822 130 83757	BAS216
6427	4822 130 83757	BAS216
6428	4822 130 83757	BAS216
6432	4822 130 83757	BAS216
6500	4822 130 83757	BAS216

6653	4822 130 10657	PTZ
6654	4822 130 10657	PTZ
6741	4822 130 83757	BAS216
6802	4822 130 10658	UDZ11B
6803	4822 130 10185	UDZ5.6B
6804	4822 130 10185	UDZ5.6B
6805	4822 130 10185	UDZ5.6B
6807	4822 130 10185	UDZ5.6B
6808	4822 130 83757	BAS216
6809	4822 130 10185	UDZ5.6B
6810	4822 130 10185	UDZ5.6B
6811	4822 130 83757	BAS216
6817	4822 130 83757	BAS216
6850	4822 130 83757	BAS216
6852	4822 130 10185	UDZ5.6B
6853	4822 130 10185	UDZ5.6B

7200	4822 130 60511	BC847B
7201	4822 209 14813	SAA7701H/N108
7202	4822 209 33985	TDA8579T/N1
7203	4822 130 60511	BC847B
7260	4822 130 42615	BC817-40
7261	4822 130 42615	BC817-40
7262	4822 130 42615	BC817-40
7263	4822 130 42615	BC817-40
7302	4822 209 33629	TDA7375
7303	4822 209 33629	TDA7375
7304	4822 130 60511	BC847B
7401	4822 209 14814	L4949NP
7402	5322 209 14877	HEF4528BT
7403	5322 209 11368	HEF4043BT
7404	4822 209 14815	VN06SP
7405	4822 209 90566	L4885CV BENDED
7406	4822 209 15099	L7805 ABV CUTED 7,75
7410	4822 130 60511	BC847B
7411	5322 130 60508	BC857B
7413	5322 130 60508	BC857B
7416	4822 130 60511	BC847B
7418	4822 209 33162	MC4558IDT
7505	5322 130 60508	BC857B
7506	5322 209 11102	HEF4052BT
7507	5322 209 60424	74HC573D
7512		
7513	4822 209 14817	P80CE559EFB/00
7514	5322 130 60508	BC857B
7600	4822 209 14819	74HC251D
7601	4822 209 14819	74HC251D
7602	4822 209 91136	74HC259D
7603	4822 209 14821	74HC42D
7650	4822 209 32743	MSM6307GS-VK
7651	4822 130 60511	BC847B
7700	4822 209 33237	TEA0677/V
7745	4822 130 60511	BC847B
7803	4822 130 60511	BC847B
7804	5322 130 60508	BC857B
7835	5322 209 11461	HEF4521BT
7850	4822 130 60511	BC847B

Detachable front electrical partslist

2900	5322 122 32654	22NF10%X7R 63V
2901	5322 122 32654	22NF10%X7R 63V
2902	5322 122 32654	22NF10%X7R 63V
2903	5322 122 34123	1NF10%X7R 50V
3900	4822 117 11449	2K2 1% 0,1W
3901	4822 051 20182	1K80 5% 0,1W
3902	4822 051 20471	470R00 5% 0,1W
3904	4822 117 11139	1K5 1% 0,1W
3905	4822 051 20221	220R00 5% 0,1W
3906	4822 051 20221	220R00 5% 0,1W
3907	4822 051 20221	220R00 5% 0,1W
3908	4822 117 10833	10K 1% 0,1W
3909	4822 051 20473	47K00 5% 0,1W
3911	4822 117 11449	2K2 1% 0,1W
3912	4822 051 20121	120R00 5% 0,1W
3913	4822 051 20121	120R00 5% 0,1W
3914	4822 051 20121	120R00 5% 0,1W
3915	4822 051 20182	1K80 5% 0,1W
3916	4822 051 20332	3K30 5% 0,1W
3917	4822 051 20332	3K30 5% 0,1W
3919	4822 117 11449	2K2 1% 0,1W
3921	4822 117 10353	150R 1% 0,1W
3923	4822 051 20008	0R00 JUMP. (0805)
3924	4822 051 20104	100K RST SM 0805 5%
3942	4822 117 10353	150R 1% 0,1W
3943	4822 117 10353	150R 1% 0,1W
3944	4822 117 10353	150R 1% 0,1W
3945	4822 117 10353	150R 1% 0,1W
3946	4822 117 10353	150R 1% 0,1W
3947	4822 051 20008	0R00 JUMP 0805
3948	4822 051 20221	220R00 5% 0,1W
3949	4822 051 20221	220R00 5% 0,1W
3950	4822 051 20221	220R00 5% 0,1W
3951	4822 051 20221	220R00 5% 0,1W
3952	4822 051 20221	220R00 5% 0,1W
3953	4822 051 20331	330R00 5% 0,1W
3955	4822 051 20271	270R00 5% 0,1W
3961	4822 117 10833	10K 1% 0,1W
3962	4822 117 11449	2K2 RST SM 0805 5%
3963	4822 117 11449	2K2 RST SM 0805 5%
3964	4822 117 11449	2K2 RST SM 0805 5%
3965	4822 117 11449	2K2 RST SM 0805 5%
3966	4822 051 20121	120R00 5% 0,1W
3967	4822 051 20478	4R70 5% 0,1W
3968	4822 051 20101	100R00 5% 0,1W
3969	4822 051 20101	100R00 5% 0,1W
3971	4822 051 20271	270R00 5% 0,1W
3972	4822 051 20101	100R00 5% 0,1W
3973	4822 117 10833	10K 1% 0,1W

6900	4822 130 10185	UDZ5.6B
6901	4822 130 10185	UDZ5.6B
6902	4822 130 10185	UDZ5.6B
6904	4822 130 83757	BAS216
6905	4822 130 83757	BAS216

6907	4822 130 10186	LYT670-JK-E9231
6909	4822 130 10186	LYT670-JK-E9231
6911	4822 130 10186	LYT670-JK-E9231
6913	4822 130 10186	LYT670-JK-E9231
6915	4822 130 10186	LYT670-JK-E9231
6917	4822 130 10186	LYT670-JK-E9231
6919	4822 130 10186	LYT670-JK-E9231
6921	4822 130 10186	LYT670-JK-E9231
6923	4822 130 10186	LYT670-JK-E9231
6925	4822 130 10186	LYT670-JK-E9231
6927	4822 130 10186	LYT670-JK-E9231
6929	4822 130 10186	LYT670-JK-E9231
6931	4822 130 10186	LYT670-JK-E9231
6933	4822 130 10186	LYT670-JK-E9231
6935	4822 130 10186	LYT670-JK-E9231
6941	4822 130 10186	LYT670-JK-E9231
6943	4822 130 10186	LYT670-JK-E9231
6945	4822 130 10186	LYT670-JK-E9231
6947	4822 130 10186	LYT670-JK-E9231
6953	4822 130 83757	BAS216
6954	4822 130 83757	BAS216
6955	4822 130 83757	BAS216
6956	4822 130 83757	BAS216
6957	4822 130 83757	BAS216

7900	5322 209 11578	PCF8574T
7901	5322 209 60424	74HC573D
7902	5322 130 60508	BC857B
7904	4822 130 42132	BC807
7905	4822 130 42615	BC817-40
7906	4822 130 42615	BC817-40
7907	4822 130 60511	BC847B
7911	4822 209 15134	

22RC548 - 22RC668

Service
Service
Service

Car Systems Service

Service Information

1- 22RC668

In case of set coming for repair with the following complaint : Keys "source" and "preset1" inactive (For sets produced before week 9651), you must apply the following solution:
Change the back cover item 2034822 426 10272. (The service stock is adapted)
Check the soldering of the diode 6957 and change it if necessary.

2- 22RC548 - 22RC668

In case of set coming for repair with the following complaint : Set switches on and off itself at low temperature, you must apply the following solution: add a 4.7 nF capacitor between pins 2 and 4 of 7403.
This consists in cutting a track, and add the capacitor and a wire according to the drawing.

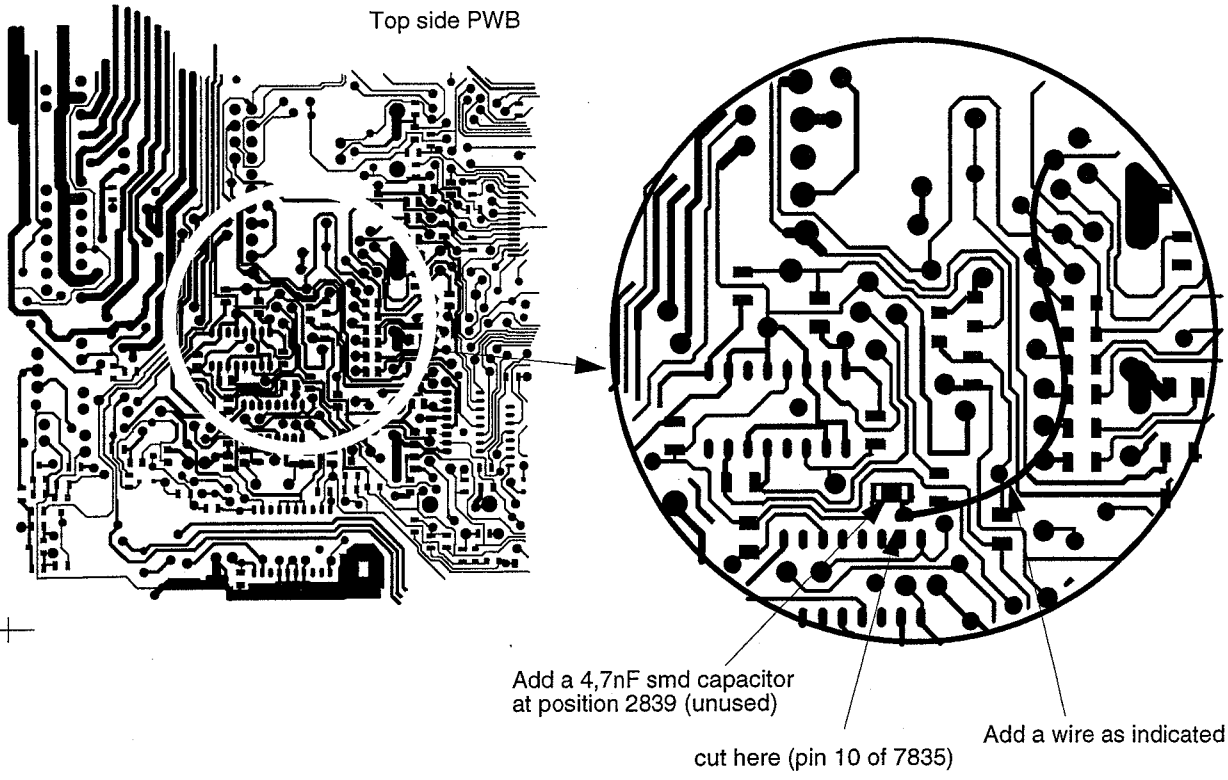

5128

Cassette Car Radio 22RC548 - 578/00

CD Car Radio 22RC668 - 688/00

Service
Service
Service

CLASS 1
LASER PRODUCT

Supplement

ServiceManual

12 V

This supplement must be used from factory change code FD01 onwards.
From this change code, the main PWB, the front PWB and the schematic diagrams are changed. The main change is in the UP parts: the main microprocessor is now with integrated ROM instead of separate ROM. Therefore, the part UP01 is deleted, and the insulating covers are no more necessary.
Some values are changed also into the "Checks and alignment" tables.
A complete new electrical partslist is issued.
This supplement must be used together with Service Manual 4822 725 24389.

Technician's remarks 2
Check and alignment ..... 3 - 3a
Power supply organization ..... 4 - 4a
Block diagram ..... 5 - 5a
Front schematic diagram ..... 6 - 6a
Front PWB RC668 - 688 (CD) ..... 7 - 7a
Front PEB RC548 - 578 (SCA deck) ..... 8 - 8a
Tuner part - schematic diagram ..... 9 - 9a
Power supply part 00 schematic diagram ..... 10 - 10a
Power supply part 01 schematic diagram ..... 11 - 11a
Power supply part 02 schematic diagram ..... 12 - 12a
Power supply part 03 schematic diagram ..... 13 - 13a
Main PWB layout - Top side view ..... 14 - 14a
Sound processing part 00 schematic diagram ..... 15 - 15a
Sound processing part 01 schematic diagram ..... 16 - 16a
Microcontroller part 00 schematic diagram ..... 17 - 17a
Microcontroller part 02 schematic diagram ..... 18 - 18a
Tape part schematic diagram ..... 19 - 19a
Power amplifier part schematic diagram ..... 20 - 20a
Main PWB layout - Bottom side view ..... 21 - 21a
Electrical partslist (main + front) ..... 22 to 24

Published by Philips Car Systems Printed in the Netherlands

© Copyright reserved

Subject to modification

4822 725 24399

PCS 88 332

PHILIPS

Technician's remarks

Check and Alignment

For all measurements, please refer to the manual "General Check & Alignment procedures for Car Systems" 4822 725 25456, unless otherwise stated.

Current and voltage

1) SET OFF

SET OFF	Voltage	Current +Acc ON	Current +Acc OFF	Supply µP pin 14 7513	V_LOW pin 34 7513
Acc Supply	+12.6V	< 2mA		min 4.5V max 5.2V	min 2V max 5.3V
Perm Supply	+12.6V	< 2mA	<3 mA		

2) SET ON (A6 not connected)

Reset pin 30	Supply µP pin 14 7513		V_LOW pin 34 7513		5V pin3 L7805 ABV		8.5V pin 3 L4885CV		V EEprom	
max 0.8V	min 4.5	max 5.2	min 2	max 5.3	min 4.8	max 5.2	min 8.2	max 8.8	min 4.5	max 5.2

Reference oscillator frequencies (to be measured via a X10 probe)

device	MSM 6307	83CE558	HEF4521	SAA7701	HEF4528
pin	24 & 25	51 & 52	4 & 6	63 & 64	9
frequency	6 MHz 0.5%	16 MHz 0.5%	4.194304 MHz 20 ppm	36.860 MHz 60 ppm	1 Hz 20%

Checks:
1) FM

FM mute	98 MHz 1mV	output at load resistor R & L = 775 mV = REF
	no signal	output should be < -24 dB (REF - 24 dB)

Demodulated FM level	98 MHz	215 mV 2dB
	Input	MPX Output of IC96 (pin 10)

Limiting point α-3dB	FM 98MHz	1mV 400Hz	6µV	4µV	9µV
	RANGE	INPUT	NOMINAL	MIN	MAX

Search levels	Input	Dx: 10µV < X < 20µV
	98 MHz	Local : 190µV < X < 290µV

2) AM

Demodulated AM level	1053KHz - m=30% - 1KHz	230 mV 2dB
	Input	Audio output of IC96 (pin 19)

Sensivity at 26dB S/N	162KHz	m = 30%	400Hz	< 38µV
	1053KHz			< 30µV
	6100KHz			<25µV

Search levels	Input	Dx: 10µV < X < 20µV
	1053KHz	Local : 35µV < X < 100µV

No alignment is needed for radio part. The tuner module IC96 is pre-aligned in the factory.
Dolby alignment, crosstalk alignment and FM DC level curve learning procedure are performed via a special equipment and software, not yet available in Service.
Some values are stored in the EEprom.
The EEprom available in service will contain mean values, that could affect slightly the performance of the set. It is the only solution until further notice. The service code of this EEprom will be given in a next Service Newsletter.
If you change the tuner module, change also the EEprom.

Deck part (for RC548/578)
Use test cassette SBC420 4822 397 30071 unless otherwise stated.

Tape speed and flutter: Use 3.15KHz test tone	Supply voltage	Tape speed	Flutter
	10.8 - 15.6 V	4.76cm/s 2%	< 0.3%

Crosstalk : use 1KHz 0dB crosstalk signal	< -40dB at speakers output R & L

CD part (for RC668/688)

Test CD	Test	Result
Eccent-music 150um 4822 397 30279	Insert disk and play track 01	No failure
Vertical deviation 4822 397 30282	Check loading, display of number of tracks and total time. Select track no 9 time 00.20 listen to the disk during 4 seconds	no electrical nor mechanical noise

Test CD	Test		Result
Audio signal disk 1 4822 397 30184	Compression Off	Crosstalk track 67 and 71	Crosstalk < -65dB
	Compression On		Crosstalk < -30dB (comp 1 by default)

Signal to noise ratio

A weighted filter, track 1 versus track 49 of disk 1	
Compression Off	S / N > 75dB
Compression On (default 1)	S / N > 45dB

POWER SUPPLY ORGANIZATION

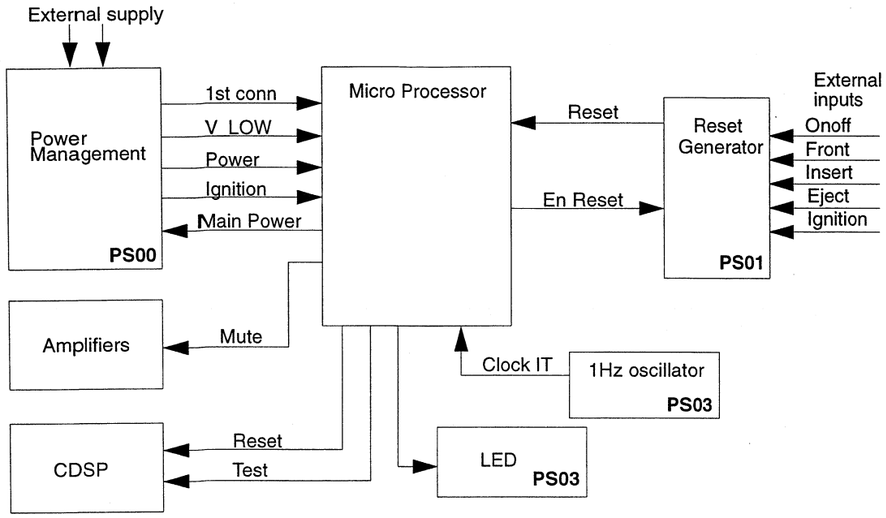

Short explanation

The reset is generated after a user action by the reset generator. Its task is to generate resets to the micro p. at input change and at power recovery (when V_LOW (pin 14 7403) is high again) only when EnReset (pin 12 7402) input is low.

If EnReset is high, no resets are expected (set is ON).

The Power Management device gives information about supply to the micro p. and provides two digital outputs (1st conn, V_LOW (pin 11 7401)), two analog outputs (Power, Ignition) and one digital input (Main Power).

The 1st connection information is a fugitive information (around 100ms, available on RESET_uC) which is memorized by the micro p. and leads to first connection actions such as RAM clear. The V_LOW output is connected to an interrupt and goes LOW when power is falling under 8V (in fact 7.9 to 9.8V, due to spread of components). It goes high again when power comes back.

Power and Ignition analog outputs are provided to enable the micro p. to measure both supply voltages.

Main power is an input that turns On and Off the power on the board.

Mute, reset and test output pins of the micro p. are performing actions on amplifiers and CDSP while the one hertz oscillator allows to update internal system clock.

1) Reset at first connection

At the first connection of the set to supplies, a "Power-on-reset" (1st_PWR_ON) will be generated via regulator L4949. This hardware reset is active till the 5V for the micro p. is stable.

2) Reset by input lines while set is OFF

The set is awaken by the an hardware reset while the micro p. is in OFF state (power down mode). Several inputs can generate the reset.

- ❒ Ignition key
- ❒ OnOff key
- ❒ Tape / CD insert
- ❒ Tape / CD eject
- ❒ Low voltage (V_LOW) - transition low to high voltage
- ❒ Front detection

Via the different interface the inputs are connected to one of the two inputs of the reset circuitry (Pin 4 or 11 of 7402)

With a transition on any of the input lines, a 1ms duration reset (RESET_uC in schematic PS01) is generated, which leads to wake up the micro p. from the power down mode. At the same time, the reset will be disabled. The micro p. is then able to check the reset origin and to decide at least if the set must switch on or not.

Waveforms on IC 7401 L4949N

1) Set OFF

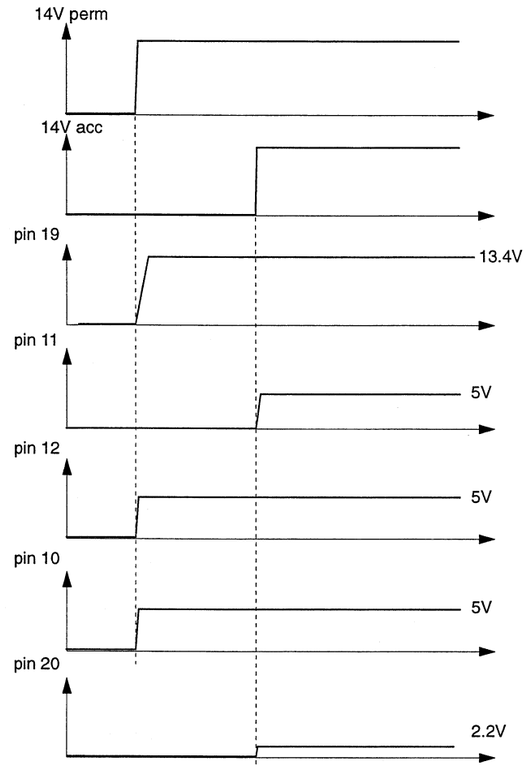

2) Set ON

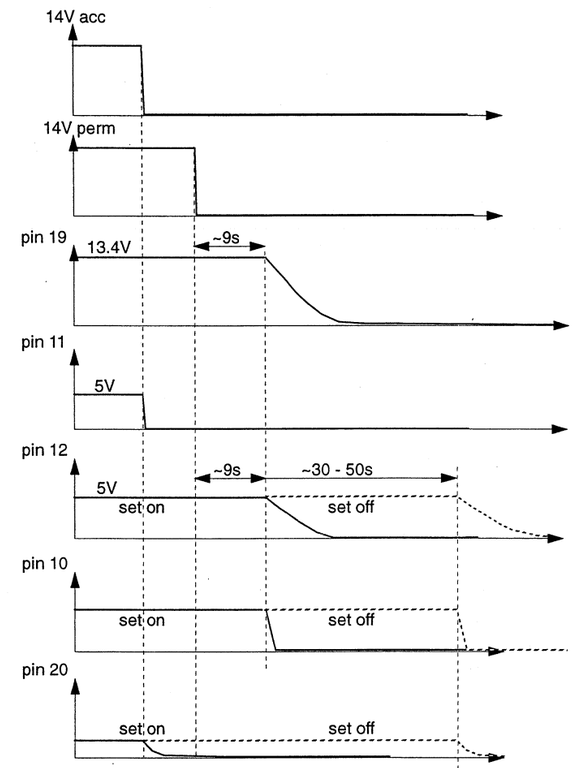

3) V_LOW handling

If a V_LOW occurs during set is On or during set On/Off procedure is performed, the micro p. switches Off the set and finishes the write EEprom activities.After this actin the hardware reset generation will be enabled and the micro p. goes to power down.

V_LOW handling

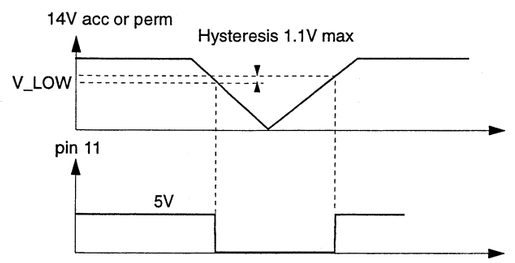

Case ① The set is On, the permanent supply falls down but is over 4.7V

Case ② The set is On, the permanent supply falls down below 4.7V for longer than backup time

Behaviour while engine start

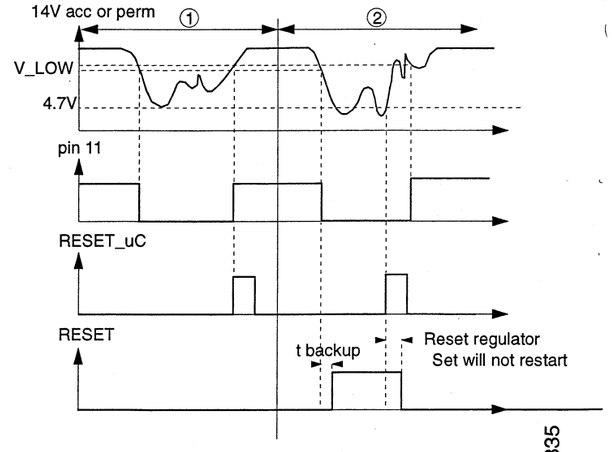

PCS 88 335

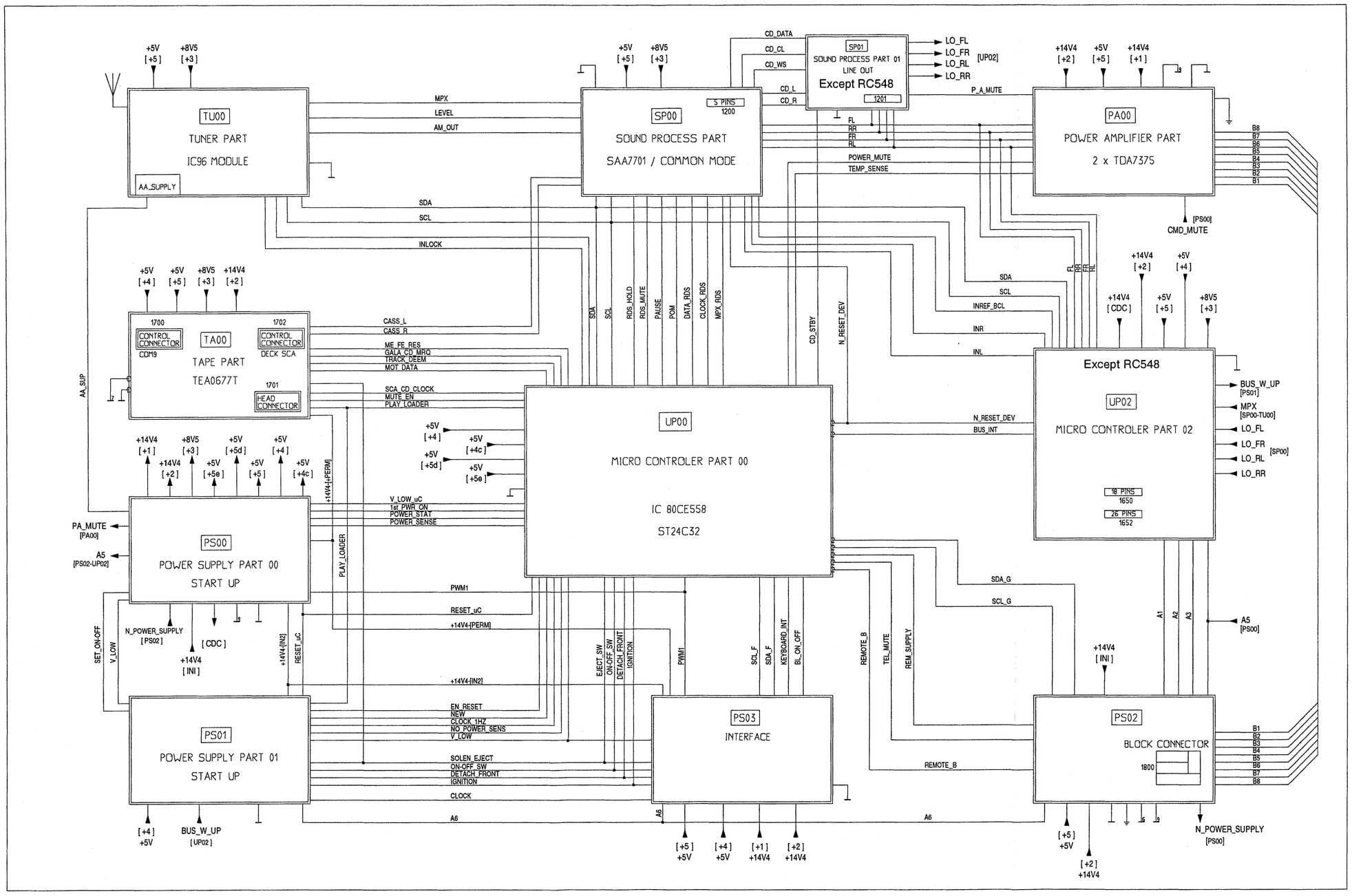

ELECTRICAL BLOC DIAGRAM

22DC548/00
22DC578/00
22DC668/00
22DC688/00

PCS 88 336

FRONT PART

22RC548/00
22RC578/00
22RC668/00
22RC688/00

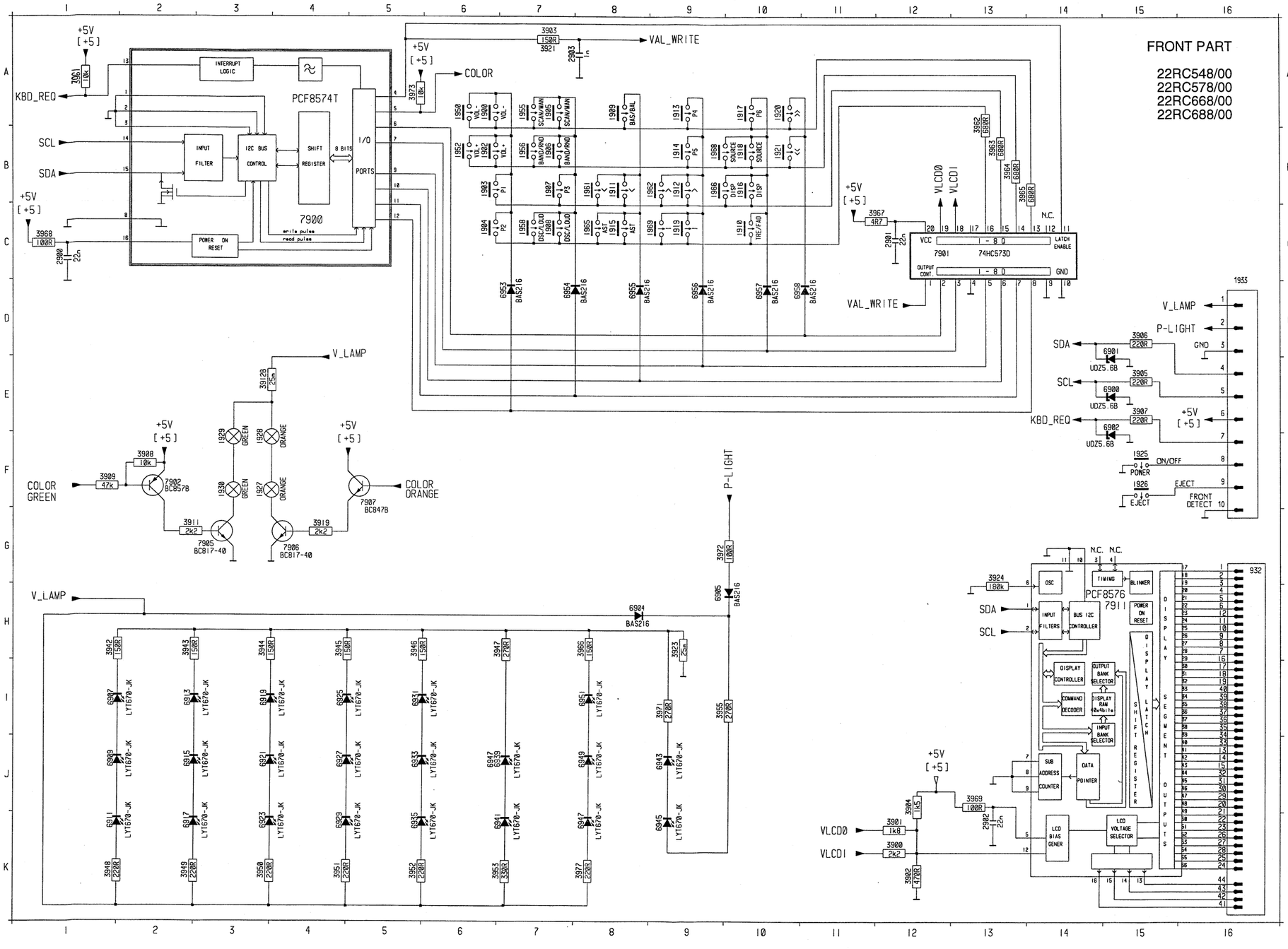

IN BLUE : ALTERNATIVE COMPONENTS FOR 22RC548 / 578

	1900	A 6	3953	K 7
	1902	B 6	3955	I 9
	1903	B 6	3961	A I
	1904	C 6	3962	AI3
A	1905	A 7	3963	BI3
	1906	B 7	3964	BI3
	1907	B 7	3965	BI3
	1908	C 7	3966	H 8
	1909	A 8	3967	CI2
	1910	CI0	3968	C I
	1911	B 8	3969	JI3
B	1912	B 9	3971	I 9
	1913	A 9	3972	G 9
	1914	B 9	3973	A 5
	1915	C 8	3977	K 8
	1916	BI0	6900	EI5
	1917	AI0	6901	DI5
C	1918	BI0	6902	EI5
	1919	C 9	6904	H 8
	1920	AI0	6905	H 9
	1921	BI0	6907	I I
	1925	FI5	6909	J I
	1926	FI5	6911	K I
D	1927	F 3	6913	I 2
	1928	F 3	6915	J 2
	1929	F 3	6917	K 2
	1930	F 3	6919	I 3
	1932	GI6	6921	J 3
	1933	DI6	6923	K 3
	1950	A 6	6925	I 4
E				
	1952	B 6	6927	J 4
	1955	A 7	6929	K 4
	1956	B 7	6931	I 5
	1958	C 7	6933	J 5
	1961	B 8	6935	K 5
	1962	B 9	6939	J 7
F	1965	C 8	6941	K 7
	1966	B 9	6943	J 9
	1968	B 9	6945	K 9
	1969	C 9	6947	K 8
	2900	C I	6949	J 8
G	2901	CI2	6951	I 8
	2902	KI3	6953	D 7
	2903	A 7	6954	D 7
	3900	KI2	6955	D 8
	3901	KI2	6956	D 9
	3902	KI2	6957	DI0
	3903	A 7	6958	DI0
H	3904	JI2	7900	C 4
	3905	EI5	7901	CI2
	3906	DI5	7902	F 2
	3907	EI5	7905	G 3
	3908	F 2	7906	G 4
	3909	F I	7907	F 5
I	3911	G 2	7911	HI5
	3912B	E 3		
	3919	G 4		
	3923	H 9		
	3924	GI3		
	3942	H I		
J	3943	H 2		
	3944	H 3		
	3945	H 4		
	3946	H 5		
	3947	H 7		
	3948	K I		
	3949	K 2		
K	3950	K 3		
	3951	K 4		
	3952	K 5		

DETACHABLE FRONT PWB FOR 22RC668 - 22RC688

B side view

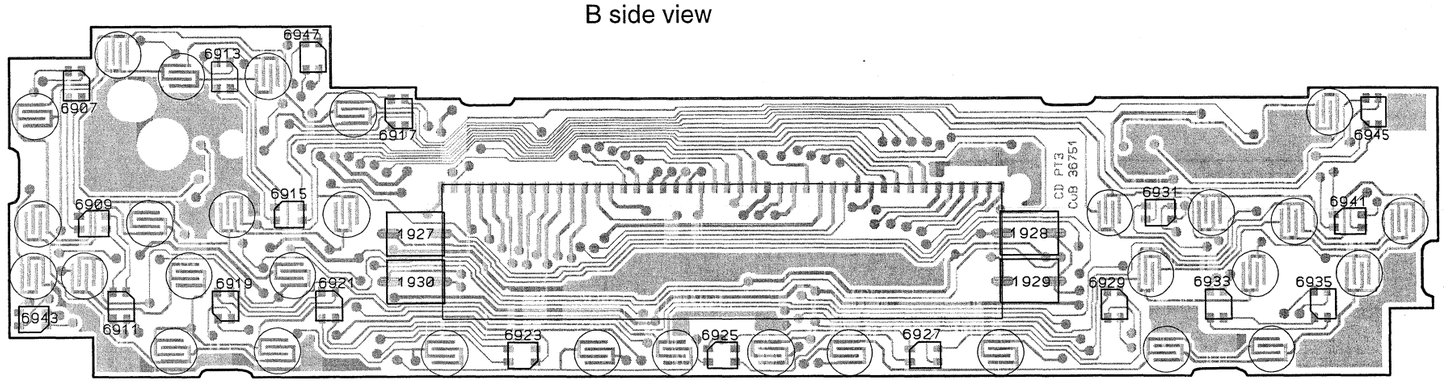

A side view

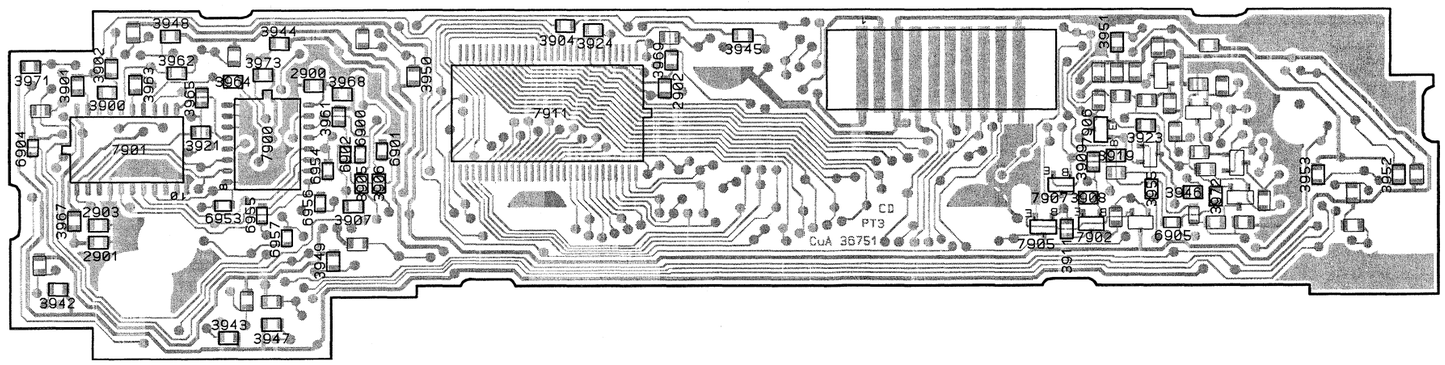

1927	D 2					6943	A 3				
1928	H 2					6945	K 1				
1929	H 3					6947	C 1				
1930	D 3										
6907	A 1										
6909	B 2										
6911	B 3										
6913	C 1										
6915	C 2										
6917	D 2										
6919	C 3										
6921	C 3										
6923	E 3										
6925	F 3										
6927	H 3										
6929	I 3										
6931	I 2										
6933	J 3										
6935	K 3										
6941	K 2										
2900	C 5	3949	C 6	6955	C 6						
2901	B 6	3950	D 5	6956	C 6						
2902	F 5	3951	I 5	6957	C 6						
2903	B 6	3952	K 6	7900	C 6						
3900	B 5	3953	C 7	7901	B 6						
3901	A 5	3953	K 6	7902	I 6						
3902	B 5	3955	I 6	7905	I 6						
3904	E 5	3961	C 5	7906	I 6						
3905	D 6	3962	B 5	7907	I 6						
3906	D 6	3963	B 5	7911	E 5						
3907	D 6	3964	C 5								
3908	I 6	3965	B 5								
3909	I 6	3967	A 6								
3911	I 6	3968	C 5								
3912	I 5	3969	F 5								
3919	I 6	3971	A 5								
3921	B 6	3972	J 6								
3923	I 6	3973	C 5								
3924	E 5	6900	D 6								
3942	A 7	6901	D 6								
3944	C 5	6902	C 6								
3945	F 5	6904	A 6								
3946	J 6	6905	I 6								
3947	C 7	6953	C 6								
3948	B 5	6954	C 6								

Differences with previous version: deleted 3913 - 3914 - 3915 - 3916 - 3917 - 3966 - 7904

DETACHABLE FRONT PWB FOR 22RC548 - 22RC578

B side view

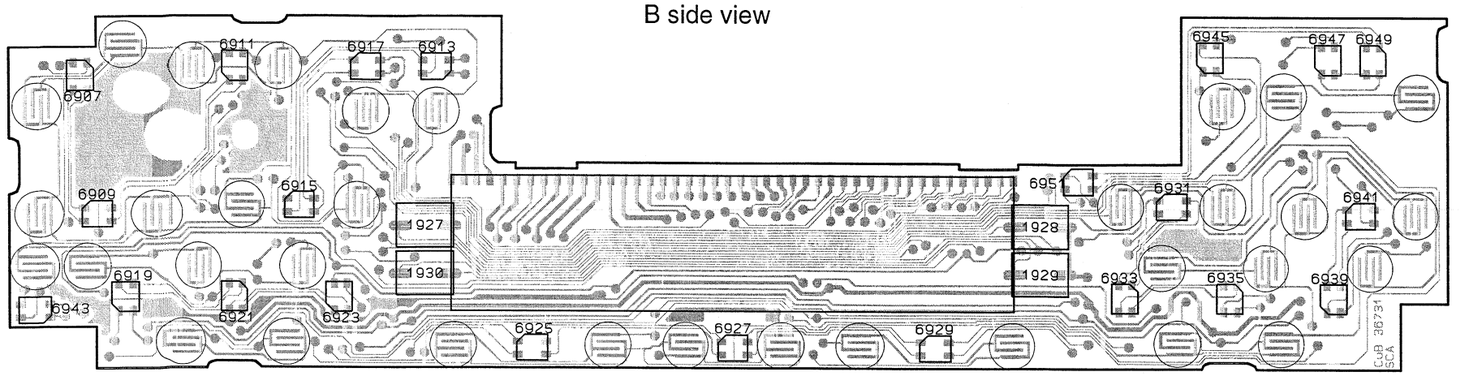

A side view

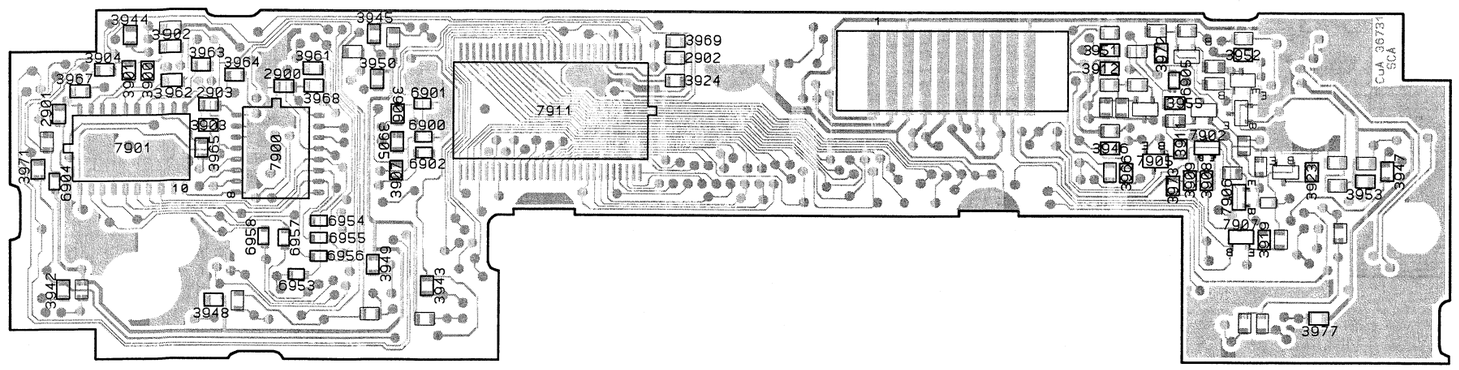

| | | |

IC96 MODULE

Not reparable module. Do not open and do not try to repair yourself!

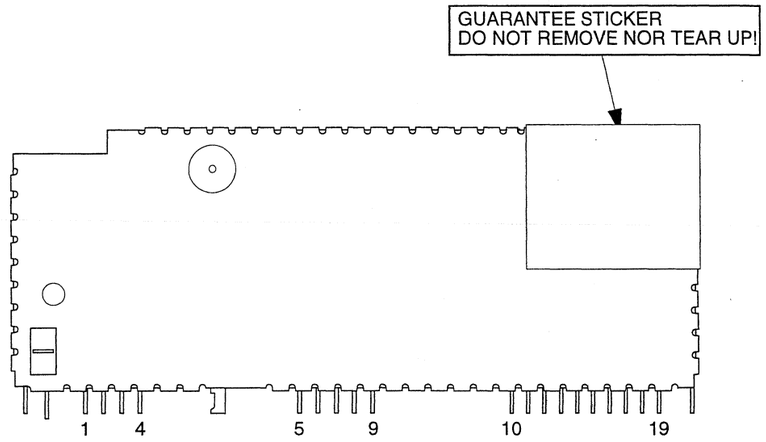

Connections

1	AM/FM Aerial input	10	Multiplex / RDS output signal
2	Ground	11	Unweighted level output
		12	I^2C SDA
5	Inlock detector pin	13	I^2C SCL
6	Vcc 8.5V	14	SDS time constant pin
7	Ground	17	Ground
8	Vcc 5.0V	19	AM audio output
9	V reference		

Quick reference data:

1) AM part
- -Longwave/Mediumwave 144-1710 KHz (inclusive USA)
- -Shortwave 5850-6250 KHz - 49 meter band
- -AM double super concept
- -AM IF1 10.7MHz
- -AM IF2 450KHz
- -First VCO frequency above input signal frequency
- -Second X-tal oscillator frenquency below IF1
- -Usable sensivity α26dB MW = 14μV typ.

1) FM part
- -FM 87.5 - 108MHz
- -FM double super concept
- -FM IF1 72.2MHz
- -FM IF2 10.7MHz
- -First VCO frequency above input signal frequency
- -Second X-tal oscillator frequency below IF1
- -Usable sensivity α26dB =2.5μV typ.
- -THD 1mV δf=75KHz = 0.5% typ
- -Signal to noise ratio = 65dB typ
- -Locktime synthetizer <2mSec

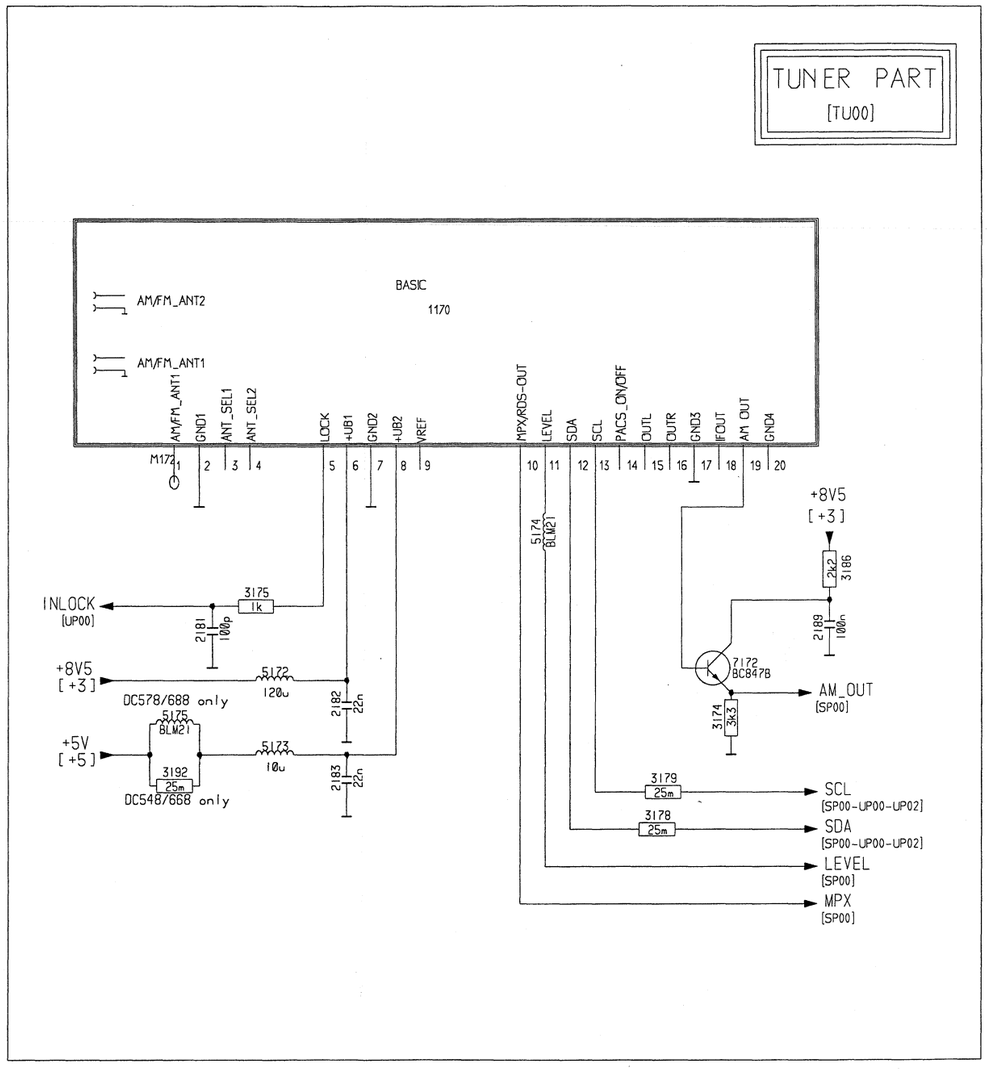

1st_PWR_ON G1
A4 ..... H16
A5 ..... B1
MUTE_ENABLE E1
POWER_SENSE C16
P_A_MUTE K14
RESET_uC F1
SET_ON-OFF A16
V_LOW E1
V_LOW_uC F1

POWER SUPPLY PART 00

[PS00]

22DC548/00
22DC578/00
22DC668/00
22DC688/00

A5 [PS02-UP02]
3414 3R3
6412 ISR154-400
2415 220p
14.2V
VN06012Y
OUT GND STATUS INPUT VCC
7404
0.0V
5.0V
14.3V
+5V [+4]
6410 BAS216
3404 220k
3405 100k
POWER_SENSE [UP00]
+14V4 +2
+8V5 +3
L4885CV 7405
2411 1000u
2409 220n *
* or 470n Y5V 0805
+14V4 [+1]
+14V4 [IN1] [PS02]
5400 96u
6401 S3G
2419 4n7
2405 2n2
+5V0 +5
L7805ABV 7406
2412 33u
2408 220n *
MUTE_EN [UP00]
6411 BAT254 548-578 only
V_LOW [PS01]
[UP00] V_LOW_uC
6413 BAT254
RESET_uC [PS01-UP00]
6414 BAS216
7400 HEF4069UBT
3411 47k
+5V0 +4
DC voltages are the same for set On / set OFF
5.0V SO
5.0V RES
5.0V VOUT
SI 2.3V
VS 13.5V
Vref
L4949NP 7401
VZ
CT 4,5,6,7,14,15,16,17
2.4V
2416 47u
6415 BAS216
3417 150k
2417 1u
2421 1u
2420 100n
2414 1u
2413 47n
3412 100
Ist_PWR_ON [UP00]
2418 220n
3488 27k
3406 150k
+14V4 [+1]
6407 ISR154-400
6408 ISR154-400
3474 10
3475 10
2410 1u
2.3V
BC8478 7410
0.1V
3473 47k
6406 UDZ-B20V
2407 470p
3472 1k
+14V4 [+PERM]
6402 ISR154-400
6403 ISR154-400
1401 1.5A 578 - 688 only
+14V4 [+CDC]
EXCEPT RC668
[PS01] +14V4 [IN2]
5401 220n
N_POWER_SUPLY [PS02]
2401 4n7
3413 1k
7400 HEF4069UBT
SET_ON-OFF [PS01]
+5V [+5]
3487 10k
7418 MC4558
+14V4 [+2]
3486 27k
+8V5 [+3]
3488 10k
3489 220k
7418 MC4558
BAS216 6432
P_A_MUTE [PA00-SP01]
3485 220k
2423 22n

	1401	F15
	2401	H14
	2402	C12
	2405	E15
A	2407	H10
	2408	E 6
	2409	D 6
	2410	G 8
	2411	D 4
	2412	E 4
	2413	H 6
B	2414	H 5
	2415	B 1
	2416	G 3
	2417	H 2
	2418	H 7
	2419	D15
C	2420	H 5
	2421	H 3
	2423	K12
	3404	C13
	3405	C14
	3406	F10
D	3408	F 7
	3411	F 3
	3412	G 4
	3413	A12
	3414	B 2
	3417	G 2
E	3430	D12
	3472	H11
	3473	H11
	3474	F 9
	3475	G 9
	3485	K11
F	3486	J11
	3487	J10
	3488	J12
	3489	J13
	5400	D16
	5401	H15
G	6401	D14
	6402	F13
	6403	F13
	6406	G11
	6407	F10
	6408	F10
H	6410	C14
	6411	E 2
	6412	B 4
	6413	F 2
	6414	F 2
	6415	G 4
I	6432	K15
	7400	A14
	7400	F 3
	7401	G 6
	7404	C12
	7405	D 5
J	7406	E 5
	7410	H10
	7418	J13
	7418	J11

CLOCK G6	NO_POWER_SENS G15
CLOCK_1HZ G1	ON_OFF_SW J15
DETACH_FRONT J15	PLAY_LOADER..... J15
EN_RESET B1	RESET_uC F1
IGNITION E15	SOLEN_EJECT..... K15
NEW D1	V_LOW D10

POWER SUPPLY PART 01

[PS01]

22DC548/00
22DC578/00
22DC668/00
22DC688/00

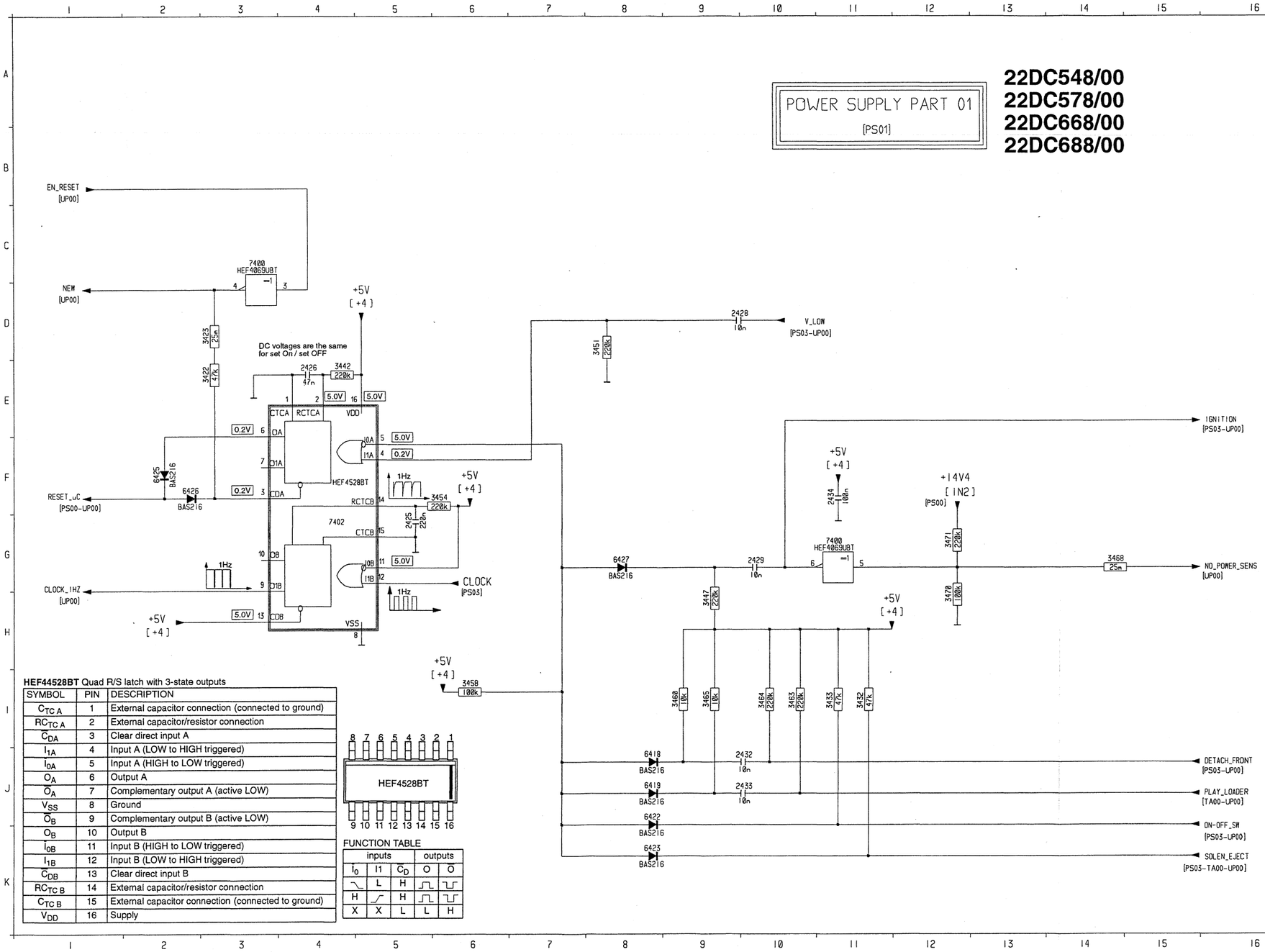

HEF44528BT Quad R/S latch with 3-state outputs

SYMBOL	PIN	DESCRIPTION
$C_{TC\,A}$	1	External capacitor connection (connected to ground)
$RC_{TC\,A}$	2	External capacitor/resistor connection
$\overline{C}_{DA}$	3	Clear direct input A
I_{1A}	4	Input A (LOW to HIGH triggered)
I_{0A}	5	Input A (HIGH to LOW triggered)
O_A	6	Output A
$\overline{O}_A$	7	Complementary output A (active LOW)
V_{SS}	8	Ground
$\overline{O}_B$	9	Complementary output B (active LOW)
O_B	10	Output B
I_{0B}	11	Input B (HIGH to LOW triggered)
I_{1B}	12	Input B (LOW to HIGH triggered)
$\overline{C}_{DB}$	13	Clear direct input B
$RC_{TC\,B}$	14	External capacitor/resistor connection
$C_{TC\,B}$	15	External capacitor connection (connected to ground)
V_{DD}	16	Supply

FUNCTION TABLE

inputs			outputs	
I_0	I1	$\overline{C}_D$	O	$\overline{O}$
⌒	L	H	⎍	⎎
H	⌒	H	⎍	⎎
X	X	L	L	H

2425	G 5
2426	E 4
2428	D 9
2429	G10
2432	J10
2433	J10
2434	F11
3422	E 3
3423	D 3
3432	111
3433	111
3442	E 4
3447	H 9
3451	D 8
3454	F 6
3458	I 6
3460	I 9
3463	110
3464	110
3465	I 9
3468	G14
3470	H12
3471	G12
6418	J 8
6419	J 8
6422	J 8
6423	K 8
6425	F 2
6426	F 2
6427	G 8
7400	C 3
7400	G11
7402	G 4

A1 ..... B2/E7
A2 ..... F7/E2
A3 ..... F7/G1
A5 ..... F8
A6 ..... F6
B1 ..... D8
B2 ..... E8
B3 ..... D8
B4 ..... D8
B5 ..... C8
B6 ..... C8
B7 ..... B8
B8 ..... B8
N_POWER_SUPPLY..... C6
REMOTE_B G5
REM_SUPPLY F1
SCL_G F8
SDA_G G8
TEL_MUTE B5

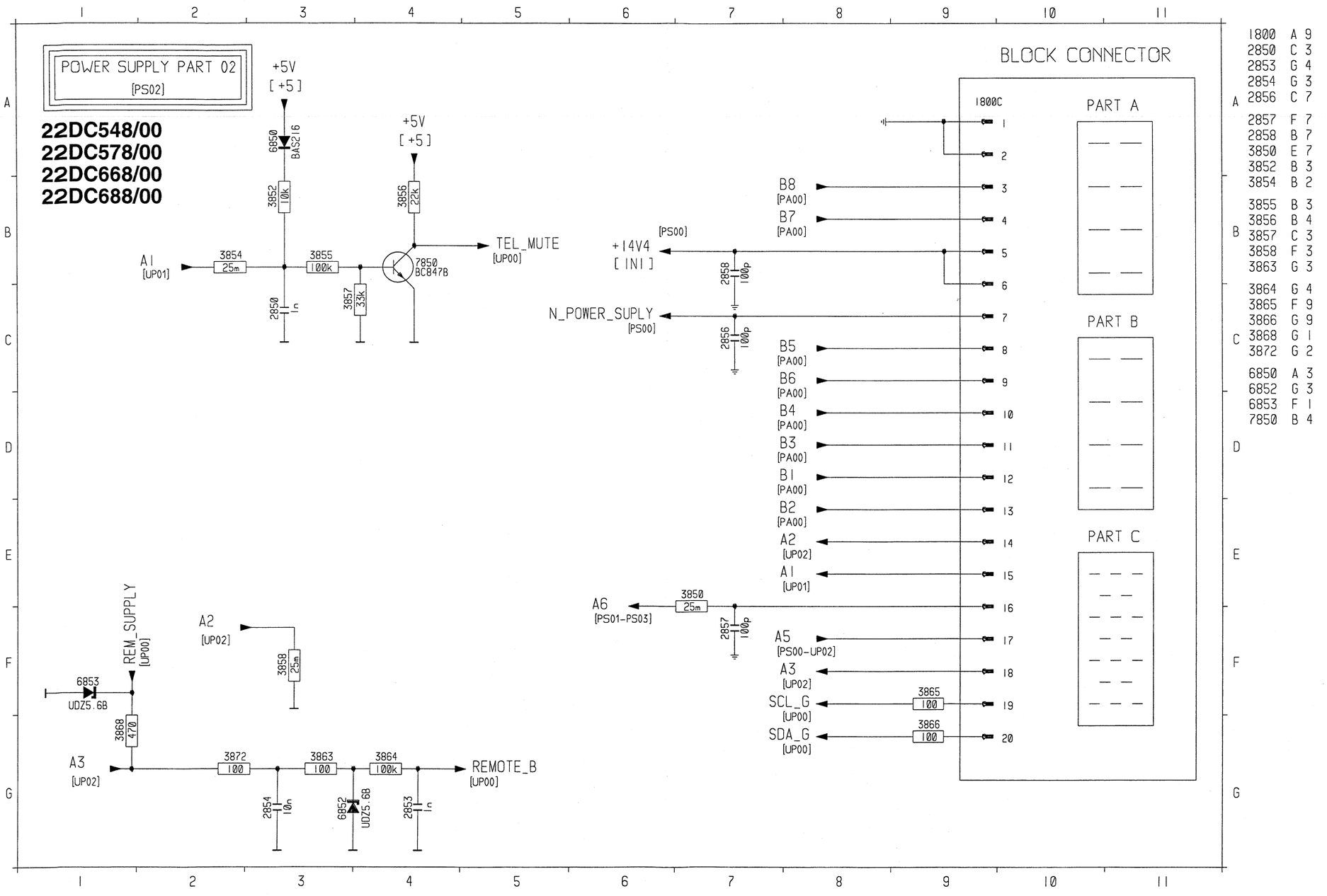

1800 A 9
2850 C 3
2853 G 4
2854 G 3
A 2856 C 7
2857 F 7
2858 B 7
3850 E 7
3852 B 3
3854 B 2
3855 B 3
3856 B 4
B 3857 C 3
3858 F 3
3863 G 3
3864 G 4
3865 F 9
3866 G 9
C 3868 G 1
3872 G 2
6850 A 3
6852 G 3
6853 F 1
7850 B 4

A6 ..... A1/E6
BL_ON-OFF J6
CLOCK F7
DETACH_FRONT I10
KEYBOARD_INT E12
ON-OFF_SW G10
PWM1 ..... G1
SCL_F D13
SDA_F E13
SOLEN_EJECT G10
V_LAMP C5/I13
V_LED A5/H13

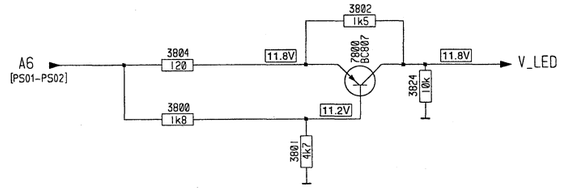

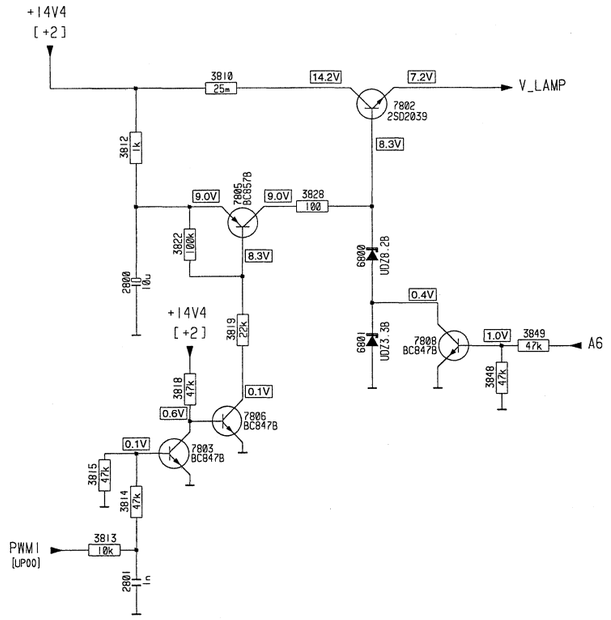

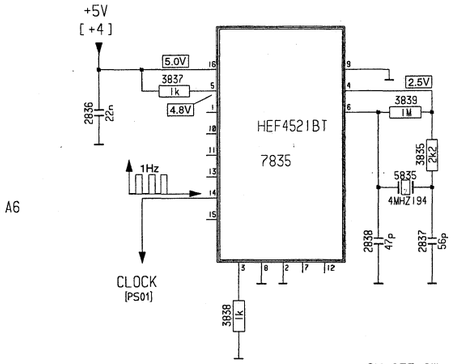

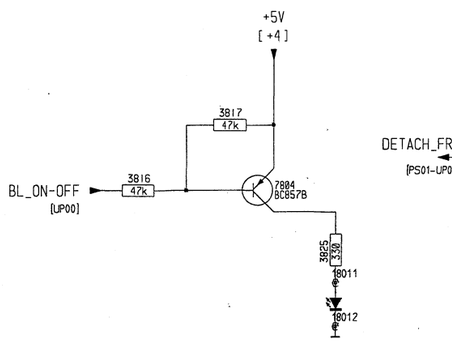

HEF4521BT 24-stage frequency divider

SYMBOL	PIN	DESCRIPTION
O_{24}	1	output 2^{24}
MR	2	asynchronous master reset
$V_{SS'}$	3	
O_2	4	
$V_{DD'}$	5	
I_2	6	
O_1	7	
V_{SS}	8	ground
I_1	9	
O_{18}	10	output 2^{18}
O_{19}	11	output 2^{19}
O_{20}	12	output 2^{20}
O_{21}	13	output 2^{21}
O_{22}	14	output 2^{22}
O_{23}	15	set input 3 (active LOW)
V_{DD}	16	power supply

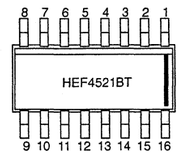

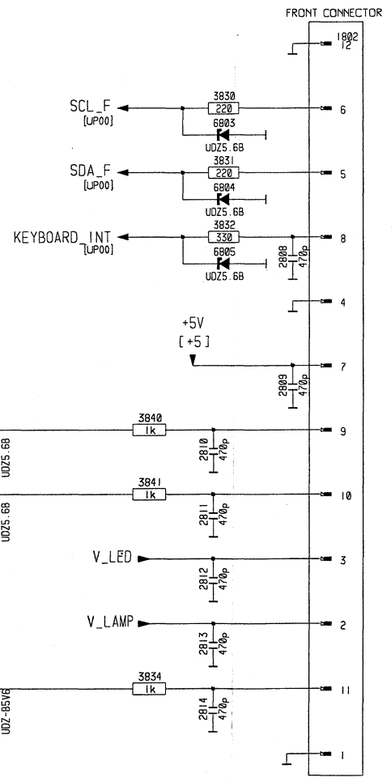

POWER SUPPLY PART 03
[PS03]

22DC548/00
22DC578/00
22DC668/00
22DC688/00

1801 K 9
1802 C15
2800 E 2
2801 H 2
2808 E14
2809 G14
2810 G13
2811 H13
2812 H13
2813 I13
2814 J13
2836 E 7
2837 F10
2838 F 9
3800 A 2
3801 B 3
3802 A 4
3804 A 2
3810 C 3
3812 D 2
3813 G 1
3814 G 2
3815 G 1
3816 J 7
3817 I 8
3818 F 2
3819 E 3
3822 E 2
3824 A 4
3825 J 9
3828 D 3
3830 D14
3831 E14
3832 E14
3834 I13
3835 E10
3837 D 7
3838 G 8
3839 E10
3840 G13
3841 H13
3843 H11
3848 F 5
3849 E 5
5835 E10
6800 E 4
6801 E 4
6803 D14
6804 E14
6805 E14
6807 J11
6809 G11
6810 H11
7800 A 4
7802 C 4
7803 G 2
7804 J 9
7805 D 3
7806 F 3
7808 F 4
7835 E 8

MAIN PWB LAYOUT. TOP SIDE VIEW

22RC548/00
22RC578/00
22RC668/00
22RC688/00

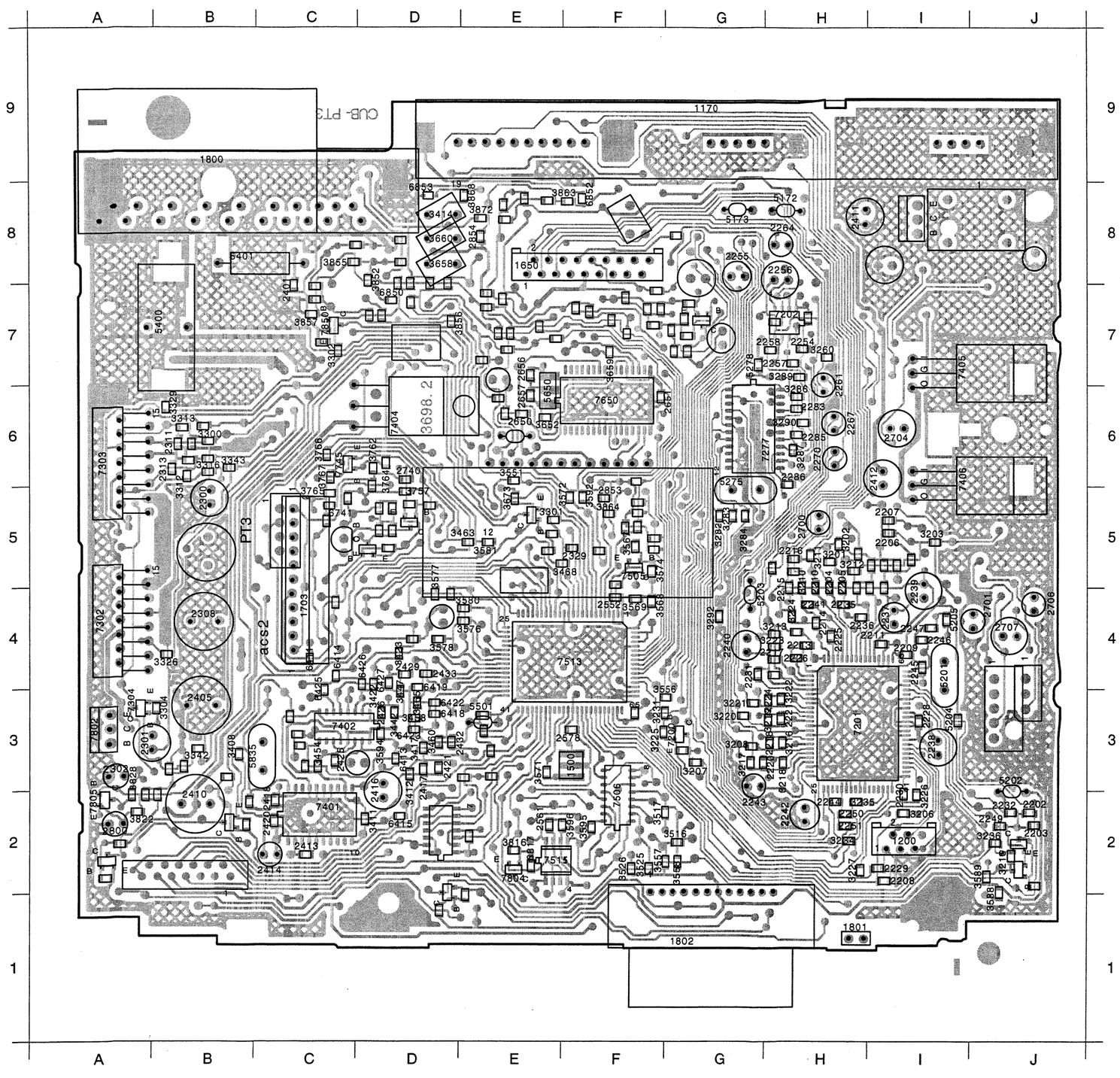

AM_OUT	G3	CD_R	J6	INL	I2	N_RESET_DEV	I13	RR	G17
CASS_L	F2	CD_WS	I10	INR	J2	PAUSE	A12	SCL	I12
CASS_R	F2	CLOCK_RDS	J8	INREF	I2	POM	D17	SDA	I12
CD_CL	I10	DATA_RDS	K10	LEVEL	D3	RDS_HOLD	A11		
CD_DATA	I10	FL	E17	MPX	H4	RDS_MUTE	A11		
CD_L	I6	FR	E17	MPX_RDS	C3	RL	F17		

SOUND PROCESS PART [SP00]

22DC548/00
22DC578/00
22DC668/00
22DC688/00

548 - 578 only

668 - 688 only

IN BLUE : RC578 - 688 ONLY

1200	I11	2242	D14	3201	G3	3224	B2	5200	B10
2202	C4	2243	D14	3202	F3	3225	D15	5201	H9
2203	B4	2247	I4	3203	F2	3226	B12	5202	A3
2204	F4	2248	I3	3204	F2	3227	B11	5203	B3
2205	F4	2249	I3	3205	F3	3228	D4	5204	I8
2206	G3	2250	I13	3206	B11	3231	C16	5205	I9
2207	F3	2251	I13	3207	C14	3234	H13	6200	B12
2208	B11	2252	J3	3208	E15	3235	H13	7200	D15
2209	H8	2253	K3	3209	H9	3236	I8	7201	F9
2210	F5	2254	I4	3210	H5	3241	K2	7202	J3
2211	B7	2255	J3	3211	G4	5200	B10		
2212	F15	2256	K5	3212	F3	5201	H9		
2213	D5	2257	J5	3213	D3	5202	A3		
2214	G5	2258	K5	3214	H8	5203	B3		
2215	H5	3201	G3	3215	K9	5204	I8		
2216	H4	3202	F3	3216	E14	5205	I9		
2217	D4	3203	F2	3217	E15	6200	B12		
2218	E14	3204	F2	3218	E14	7200	D15		
2219	E15	3205	F3	3219	F14	7201	F9		
2220	E14	3206	B11	3220	F15	7202	J3		
2221	F14	3207	C14	3221	G15				
2222	F15	3208	E15	3222	F14				
2223	G15	3209	H9	3223	D14				
2224	F14	3210	H5	3224	B4				
2225	C4	3211	G4	3225	D15				
2226	B7	3212	F3	3226	B12				
2228	B10	3213	D3	3227	B11				
2229	B12	3214	H8	3228	D4				
2230	B12	3215	K9	3231	C16				
2231	B12	3216	E14	3234	H13				
2232	B2	3217	E15	3235	H13				
2235	F4	3218	E14	3236	I8				
2236	G4	3219	F14	3241	K2				
2237	D5	3220	F15	5200	B10				
2238	B10	3221	G15	5201	H9				
2239	B2	3222	F14	5202	A3				
2240	B13	3223	D14	5203	B3				
2241	G5	3224	B4	5204	I8				
2242	D14	3225	D15	5205	I9				
2243	D14	3226	B12	6200	B12				
2244	I14	3227	B11	7200	D15				
2245	I9	3228	D4	7201	F9				
2246	I9	3231	C16	7202	J3				
2247	I9	3234	H13						
2248	I8	3235	H13						
2249	I8	3236	I8						
2250	I13	3241	K2						
2251	I13	3321	C16						
2252	J3	3322	B2						
2253	K3	3323	B2						
2254	I4	3324	B2						
2255	J3	3325	B2						
2256	K5	3326	B2						
2257	J5	3327	B2						
2258	K5	3328	B2						
3201	G3	3329	B2						
3202	F3	3330	B2						
3203	F2	3331	B2						
3204	F2	3332	B2						
3205	F3	3333	B2						
3206	B11	3334	B2						
3207	C14	3335	B2						
3208	E15	3336	B2						
3209	H9	3337	B2						
3210	H5	3338	B2						
3211	G4	3339	B2						
3212	F3	3340	B2						
3213	D3	3341	B2						
3214	H8	3342	B2						
3215	K9	3343	B2						
3216	E14	3344	B2						
3217	E15	3345	B2						
3218	E14	3346	B2						
3219	F14	3347	B2						
3220	F15	3348	B2						
3221	G15	3349	B2						
3222	F14	3350	B2						
3223	D14	3351	B2						

CD-R C10
CD-L B10
CD_CL C4
CD_DATA B4
CD_WS C4
CDC_STBY A1
FL E6

FR G6
LO_FL D7
LO_FR F7
LO_RL D11
LO_RR F11
L_O_MUTE F5
L_O_MUTE E7/G7

L_O_MUTE E11/G11
P_A_MUTE F4
RL E9
RR G9

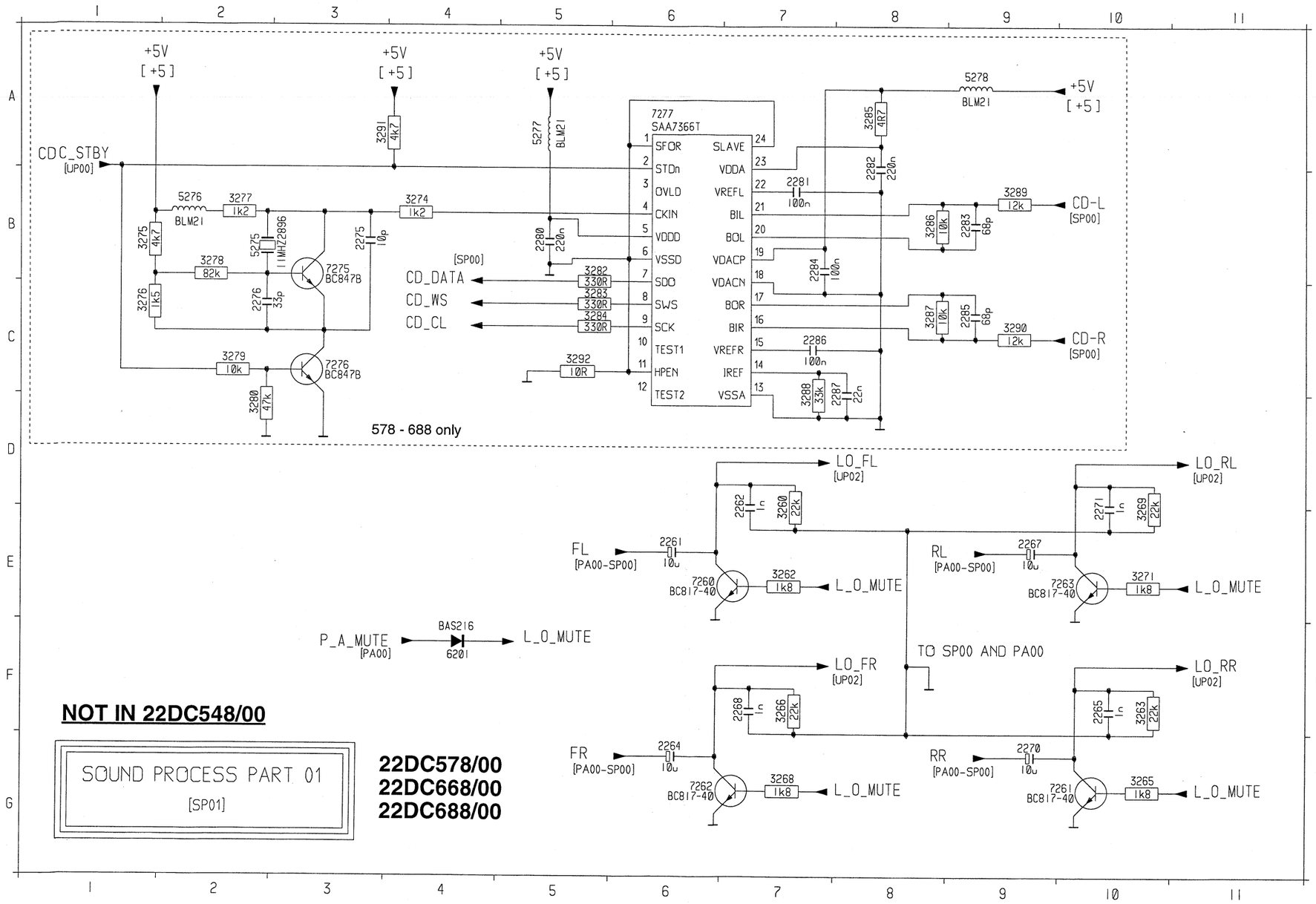

NOT IN 22DC548/00

SOUND PROCESS PART 01
[SP01]

22DC578/00
22DC668/00
22DC688/00

	2261	E 6	5276	B 2
	2262	D 7	5277	A 5
	2264	G 6	5278	A 9
	2265	FI0	6201	F 4
A	2267	E 9	7260	E 6
	2268	F 7	7261	GI0
	2270	G 9	7262	G 6
	2271	DI0	7263	EI0
	2275	B 3	7275	B 3
	2276	C 2	7276	C 3
	2280	B 5	7277	A 6
B	2281	B 7		
	2282	A 8		
	2283	B 9		
	2284	B 7		
	2285	C 9		
	2286	C 7		
C	2287	C 8		
	3260	D 7		
	3262	E 7		
	3263	FI0		
	3265	GI0		
	3266	F 7		
	3268	G 7		
D	3269	DI0		
	3271	EI0		
	3274	B 4		
	3275	B I		
	3276	C I		
	3277	B 2		
E	3278	B 2		
	3279	C 2		
	3280	D 2		
	3282	B 5		
	3283	C 5		
	3284	C 5		
F	3285	A 8		
	3286	B 8		
	3287	C 8		
	3288	C 7		
	3289	B 9		
	3290	C 9		
	3291	A 3		
G	3292	C 5		
	5275	B 2		

1st_PWR_ON G10	DATA_RDS H10	IGNITION G2	NEW D1/E10	POM G9	REMOTE_B K2	SCL_G D13	SET_ON-OFF J9
BL_ON-OFF I1	DETACH_FRONT I2	INLOCK J9	NO_POWER_SENS I2	POWER_MUTE G10	REM_SUPPLY D1	SCL_uC D8/D15	SOLEN_EJECT G1
BUS_INT F1	EN_RESET J10	KEYBOARD_INT H1	N_RESET_DEV I12	POWER_SENS J1	RESET_uC E9/C17	SDA B12	TEL_MUTE J9
CDC_STBY J10	GALA_CD_MRQ F2	ME_FE_RES G9	ON-OFF_SW G2	PWM1 ..... E10	SCA_CD_CLOCK F1	SDA_F B13	TEMP_SENSE J2
CLOCK_1HZ H2	I2C_SWITCH1 ..... H9/B17	MOX_RDS H9	PAUSE I10	RDS_HOLD I10	SCL C12	SDA_G B13	TRACK_DEEM F10
CLOCK_RDS H9	I2C_SWITCH2 ..... H10/C17	MOT_DATA K9	PLAY_LOADER G1	RDS_MUTE I9	SCL_F C13	SDA_uC D8/A15	V_LOW_uC F2

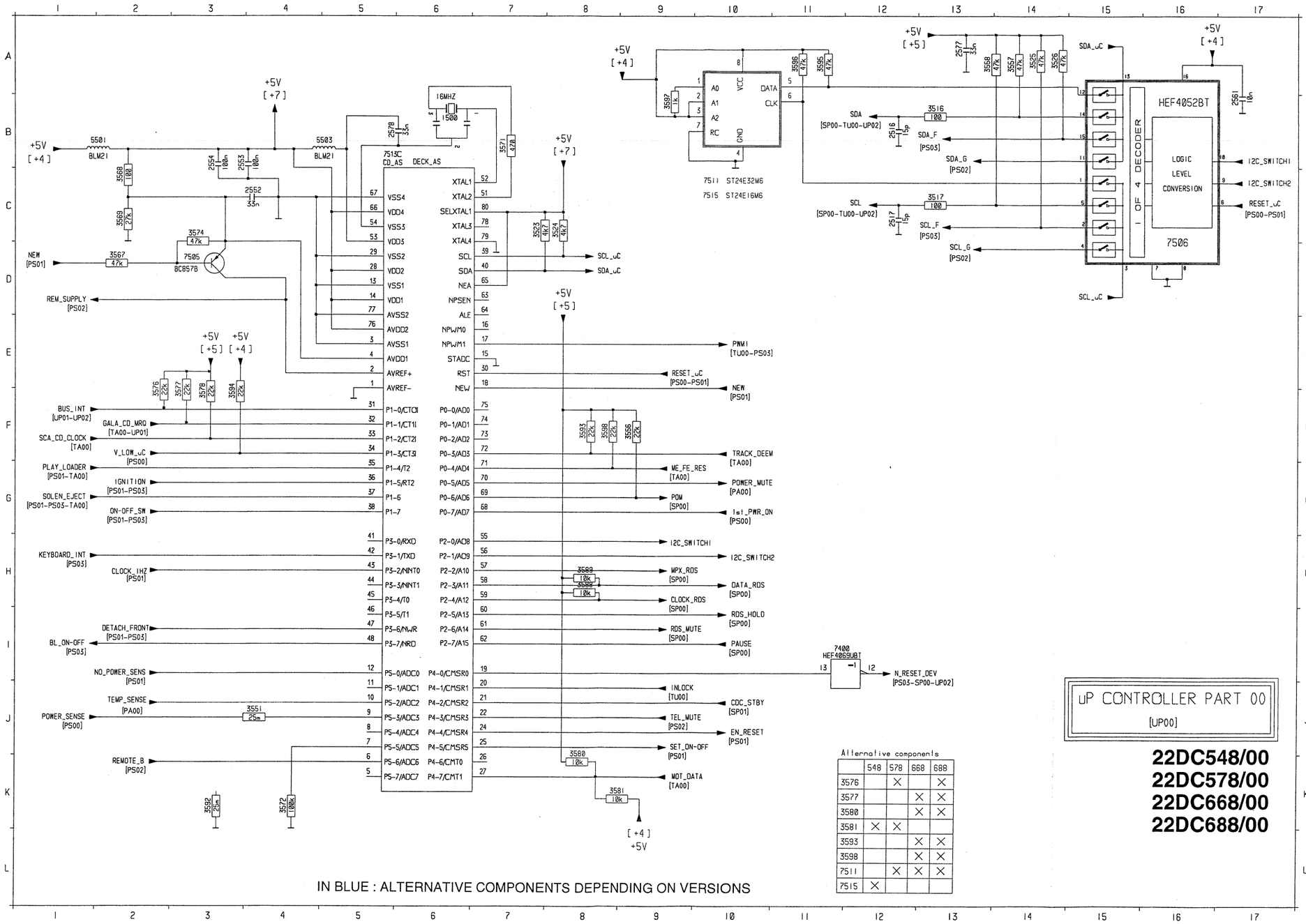

IN BLUE : ALTERNATIVE COMPONENTS DEPENDING ON VERSIONS

Alternative components

	548	578	668	688
3576		X		X
3577			X	X
3580			X	X
3581	X	X		
3593			X	X
3598			X	X
7511		X	X	X
7515	X			

uP CONTROLLER PART 00

[UP00]

22DC548/00
22DC578/00
22DC668/00
22DC688/00

INL..... E9
INR..... E9
INREF_BCL D9
LO_FL A9
LO_FR..... A9
LO_RL..... A9
LO_RR..... A9
MRQ_D2B B1
RESET_DEV B1
SCL..... D1
SDA D1

BUS ADAPTATOR CONTROL I2C/D2B FOR CD CHANGER

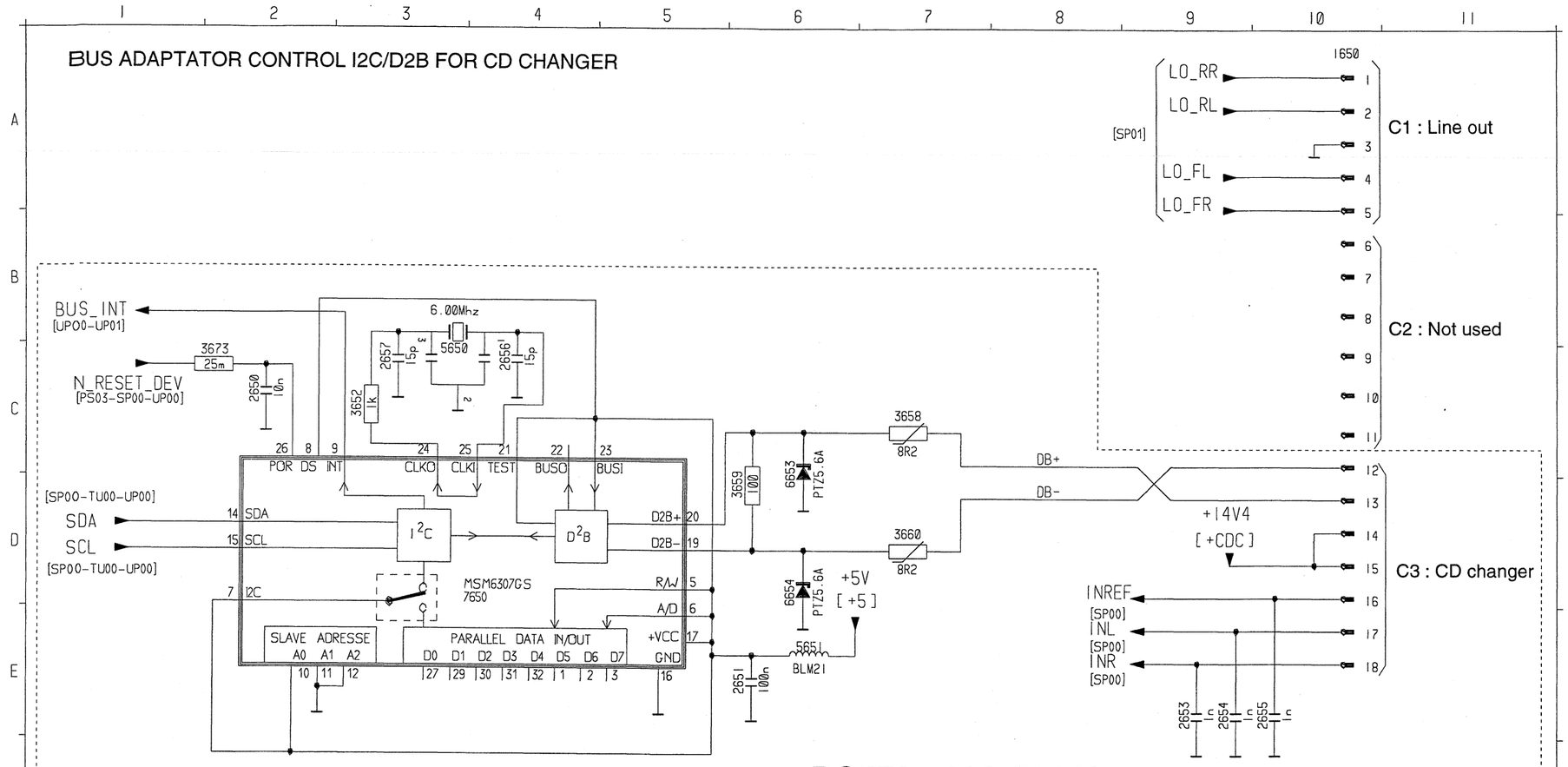

RC578 - 688 ONLY

MSM6307GS D²B IC

SYMBOL	I/O	DESCRIPTION
POR	I	Power on - reset
R / W	I	Read / Write selector
DS	I	Data strobe to access data bus
A / D	I	Selects address or data on D0 ~ d7
SDA	I/O	I²C data signal input / output
SCL	I/O	I²C clock signal input / output
I2C	I	Selects I²C or parallel interface
INT	O	Interrupt output
BUSIN	I	D2B input (TTL level)
BUSOUT	O	D2B output (TTL level)
DBN & DBP	I/Os	Differential D2B lines of the internal driver/ receiver, to be terminated with 60Ω
TEST	I	Selects the test mode for factory purposes
6MCI	I	Clock input 6MHz resonator or X-TAL
6MCO	O	Clock output 6MHz resonator or X-TAL
D0 ~ D7	I/Os	8-bit bi-directional address or data bus
A0 ~ A2	I	Programmables I²C slave addresses

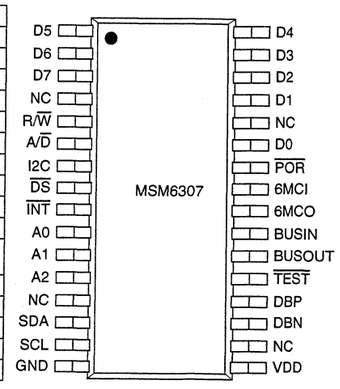

uP CONTROLLER PART 02
[UP02]

22DC578/00
22DC668/00
22DC688/00

CASS_L E16
CASS_R A16
GALA_CD_MRQ I7
ME_FE_RES A14/K7
MUTE_EN E3
PLAY_LOADER G10
SCA_CD_CLOCK F3/I11
MOT_DATA F3/K12
TRACK_DEEM A8/J7

TAPE PART
[TA00]

22DC548/00
22DC578/00
22DC668/00
22DC688/00

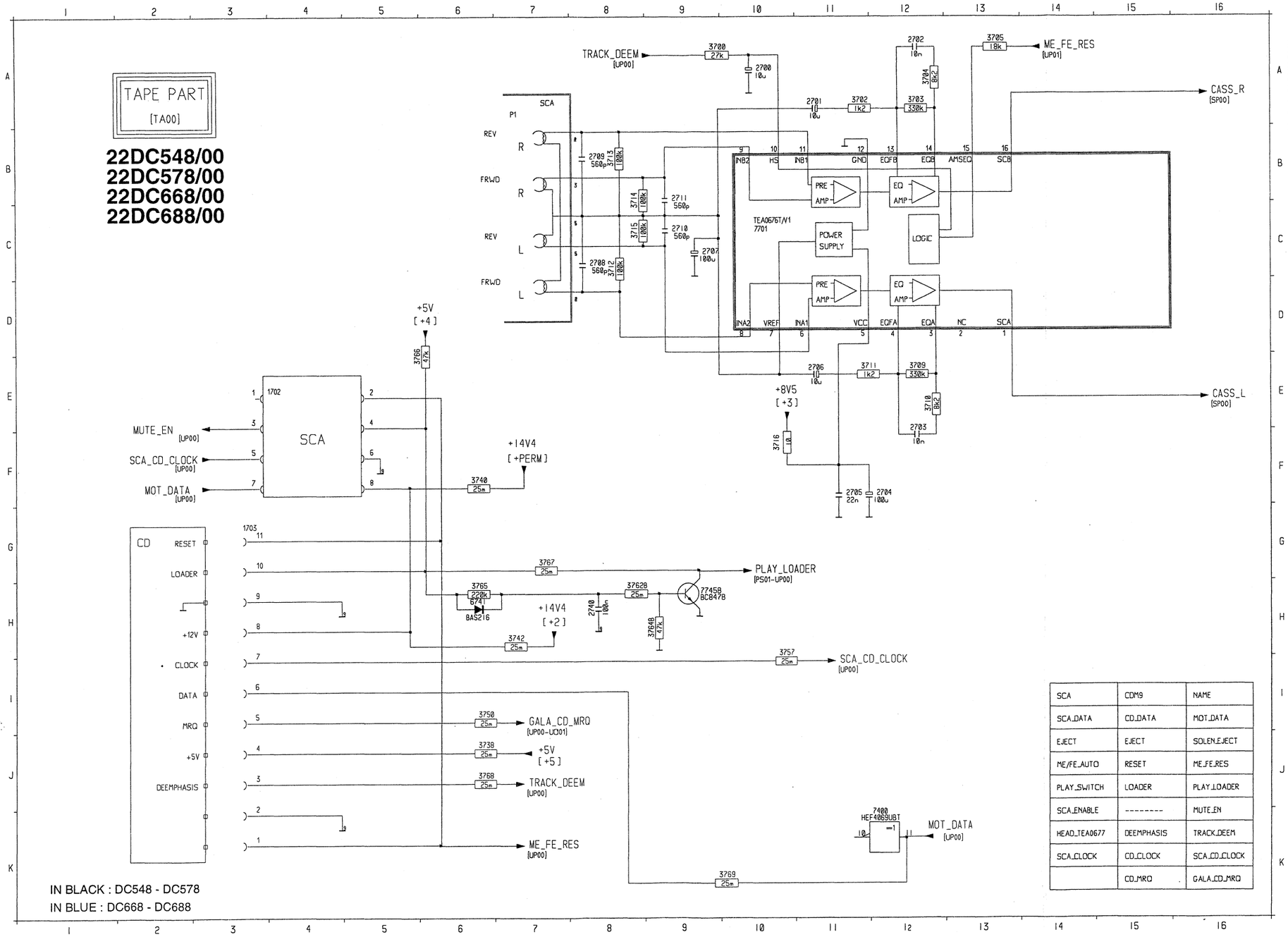

IN BLACK : DC548 - DC578
IN BLUE : DC668 - DC688

SCA	CDM9	NAME
SCA_DATA	CD_DATA	MOT_DATA
EJECT	EJECT	SOLEN_EJECT
ME/FE_AUTO	RESET	ME_FE_RES
PLAY_SWITCH	LOADER	PLAY_LOADER
SCA_ENABLE	--------	MUTE_EN
HEAD_TEA0677	DEEMPHASIS	TRACK_DEEM
SCA_CLOCK	CD_CLOCK	SCA_CD_CLOCK
	CD_MRQ	GALA_CD_MRQ

1702 E 3
1703 G 3
2700 A10
2701 A11
2702 A12
2703 F12
2704 F12
2705 F11
2706 E11
2707 C 9
2708 C 8
2709 B 8
2710 C 9
2711 B 9
2740 H 8
3700 A 9
3702 A11
3703 A12
3704 A12
3705 A13
3709 E12
3710 E12
3711 E11
3712 C 8
3713 B 8
3714 B 8
3715 C 8
3716 F10
3738 J 6
3740 F 6
3742 H 7
3750 I 6
3757 H10
3762B H 8
3764B H 9
3765 H 6
3766 E 5
3767 G 7
3768 J 6
3769 K10
6741 H 6
7400 K12
7701 C10
7745B H 9

B1 ..... C16
B2 ..... C16
B3 ..... D16
B4 ..... D16
B5 ..... I16
B6 ..... I16
B7 ..... J16
B8 ..... J16
FL H1
FR J1
PA_MUTE C1
POWER_MUTE B1
RL J1
RR I1
SI A5-A8-G8
TEMP_SENSE G1

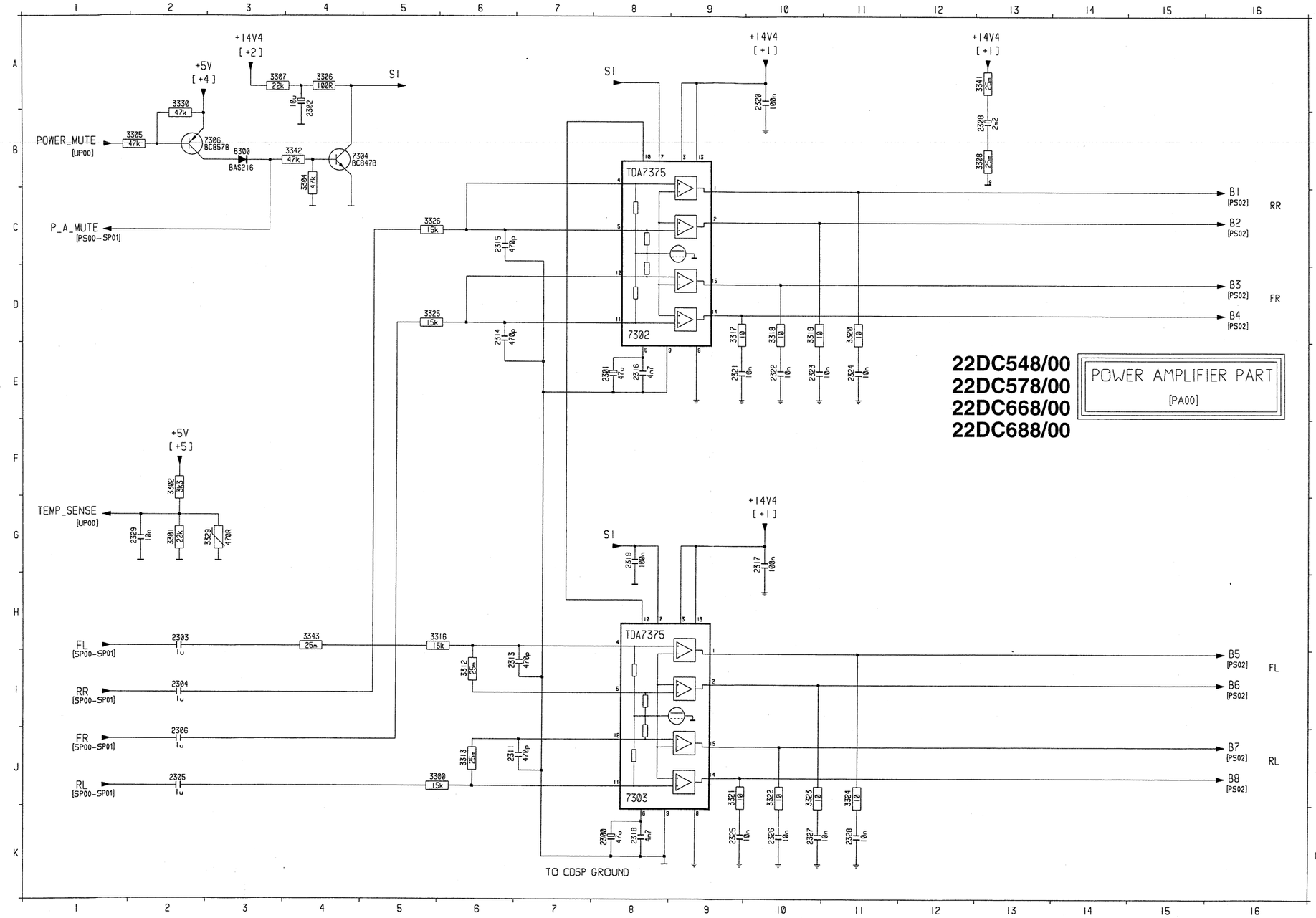

2300 K 8
2301 E 8
2302 A 4
2303 H 2
2304 I 2
2305 J 2
2306 J 2
2308 B13
2311 J 6
2313 I 6
2314 D 6
2315 C 6
2316 E 8
2317 G10
2318 K 8
2319 G 8
2320 A10
2321 E 9
2322 E10
2323 E10
2324 E11
2325 K 9
2326 K10
2327 K10
2328 K11
2329 G 2
3300 J 6
3301 G 2
3302 F 2
3304 B 4
3305 B 2
3306 A 4
3307 A 3
3308 B13
3312 I 6
3313 J 6
3316 H 6
3317 D 9
3318 D10
3319 D10
3320 D11
3321 J 9
3322 J10
3323 J10
3324 J11
3325 D 5
3326 C 5
3329 G 3
3330 A 2
3341 A13
3342 B 4
3343 H 4
6300 B 3
7302 D 8
7303 J 8
7304 B 4
7306 B 2

MAIN PWB LAYOUT. BOTTOM SIDE VIEW

22RC548/00
22RC578/00
22RC668/00
22RC688/00

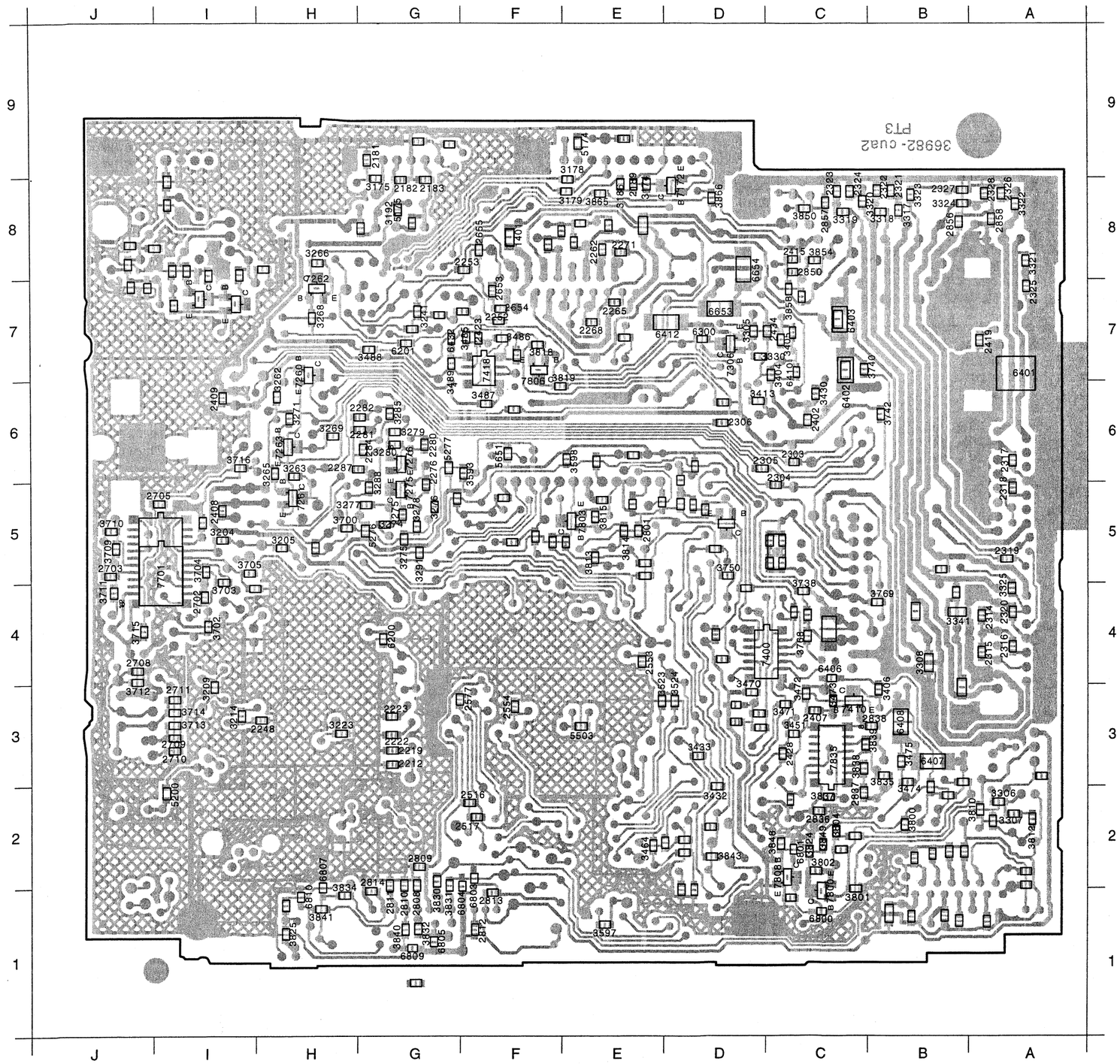

1401	F 7	2850	C 7	3705	I 4	7261	H 5
2181	H 8	2856	B 8	3709	J 4	7262	H 7
2182	G 8	2857	C 8	3710	J 5	7263	H 5
2183	G 8	2858	B 8	3711	J 4	7275	G 5
2189	E 8	3174	E 8	3712	J 3	7276	G 5
2212	G 2	3175	H 8	3713	J 3	7306	D 6
2219	G 2	3178	F 8	3714	J 3	7400	D 3
2222	G 3	3179	F 8	3715	J 4	7410	C 3
2223	G 3	3186	E 8	3716	I 5	7418	F 6
2248	I 3	3192	G 8	3738	C 4	7701	J 4
2252	F 7	3204	I 4	3740	C 6	7800	C 1
2253	G 7	3205	H 4	3742	C 6	7803	F 5
2262	E 7	3209	I 3	3750	D 4	7806	F 6
2265	E 7	3214	I 3	3768	C 4	7808	D 1
2268	E 7	3223	H 3	3769	C 4	7835	C 2
2271	E 7	3241	G 7	3800	B 2		
2275	G 5	3262	I 6	3801	C 1		
2276	G 5	3263	H 5	3802	C 1		
2280	G 5	3265	I 5	3804	C 2		
2281	H 6	3266	H 7	3810	B 2		
2282	H 6	3268	H 7	3812	A 2		
2284	H 5	3269	H 6	3813	E 4		
2287	H 5	3271	H 6	3814	E 5		
2303	C 5	3274	G 5	3815	E 5		
2304	D 5	3275	G 4	3818	F 6		
2305	D 5	3276	G 5	3819	F 6		
2306	D 6	3277	H 5	3824	C 1		
2314	B 4	3278	G 5	3825	H 1		
2315	B 3	3279	G 6	3830	G 1		
2316	A 3	3280	G 5	3831	G 1		
2317	A 5	3285	G 6	3832	G 1		
2318	A 5	3288	H 5	3834	H 1		
2319	A 4	3291	G 4	3835	C 2		
2320	A 4	3305	D 7	3837	C 2		
2321	B 8	3306	A 2	3838	C 2		
2322	C 8	3307	A 2	3839	C 2		
2323	C 8	3308	B 3	3840	G 1		
2324	C 8	3317	B 8	3841	H 1		
2325	A 7	3318	C 8	3843	D 1		
2326	A 8	3319	C 8	3848	D 1		
2327	B 8	3320	C 8	3849	C 1		
2328	B 8	3321	A 7	3850	C 8		
2402	C 6	3322	A 8	3854	C 7		
2407	C 3	3323	B 8	3858	C 7		
2408	I 5	3324	B 8	3865	E 8		
2409	I 6	3325	A 4	3866	D 8		
2415	C 7	3330	D 6	5174	F 8		
2419	B 6	3341	B 4	5175	G 8		
2423	G 6	3404	D 6	5200	J 2		
2428	D 2	3405	D 6	5276	H 5		
2434	D 7	3406	C 3	5277	G 5		
2516	G 2	3413	D 6	5503	F 3		
2517	G 2	3430	C 6	5651	F 5		
2553	E 3	3432	D 2	6200	G 3		
2554	F 3	3433	D 2	6201	G 6		
2577	G 3	3451	C 3	6300	D 6		
2653	F 7	3464	E 1	6401	A 6		
2654	F 7	3470	D 3	6402	C 6		
2655	G 7	3471	D 3	6403	C 7		
2702	I 4	3472	C 3	6406	C 3		
2703	J 4	3473	C 3	6407	B 2		
2705	J 5	3474	B 2	6408	B 3		
2708	J 3	3475	B 2	6410	C 6		
2709	J 3	3485	G 6	6412	E 7		
2710	J 2	3486	F 6	6432	G 6		
2711	J 3	3487	F 6	6653	D 7		
2801	E 5	3488	H 6	6654	D 7		
2808	G 1	3489	G 6	6800	C 1		
2809	G 1	3523	E 3	6801	C 1		
2810	G 1	3524	E 3	6803	G 1		
2811	G 1	3593	G 5	6804	G 1		
2812	G 1	3597	E 1	6805	G 1		
2813	F 1	3598	F 5	6807	H 1		
2814	H 1	3700	H 5	6809	G 1		
2836	C 2	3702	I 4	6810	H 1		
2837	C 2	3703	I 4	7172	E 8		
2838	C 3	3704	I 4	7260	H 6		

Miscellaneous		
1000	4822 691 1 0366	
1170	4822 210 1 0721	TUNER
1500	4822 242 1 0564	CSTCS16.00MX040-TC
2181	5322 122 32531	100pF 5% 0805 NPO
2182	5322 122 32654	22nF 10% X7R 63V
2183	5322 122 32654	22nF 10% X7R 63V
2189	4822 126 1 3196	100N 10% 0805 X7R
2200	4822 126 1 3196	100nF 10% X7R 25V
2202	5322 122 34123	1nF 10% X7R 50V
2203	4822 126 1 3196	100N 10% 0805 X7R
2204	4822 126 1 3849	220N 16V 10% 0805 X7R
2205	4822 126 1 3849	220N 16V 10% 0805 X7R
2206	5322 126 1 0223	4n7 10% X7R 0805
2207	5322 126 1 0223	4n7 10% X7R 0805
2208	5322 122 32531	100pF 5%NP0 50V
2209	4822 122 33342	33nF 10% X7R 63V
2210	5322 122 32654	22N 10% 0805 X7R
2211	4822 126 1 3196	100nF 10% X7R 25V
2212	5322 122 34098	10nF 10% X7R 63V
2213	5322 122 34098	10nF 10% X7R 63V
2214	5322 122 31863	330pF 5%NP0 50V
2215	5322 122 33538	150pF 2%NP0 63V
2216	5322 122 31863	330pF 5%NP0 50V
2217	5322 122 34123	1nF 10% X7R 50V
2218	5322 122 34123	1nF 10% X7R 50V
2219	5322 122 34098	10nF 10% X7R 63V
2220	5322 122 34123	1nF 10% X7R 50V
2221	5322 122 34123	1nF 10% X7R 50V
2222	5322 122 34098	10nF 10% X7R 63V
2223	5322 122 34098	10nF 10% X7R 63V
2224	5322 122 34123	1nF 10% X7R 50V
2225	4822 126 13196	100nF 10% X7R 25V
2226	5322 122 34123	1nF 10% X7R 50V
2228	4822 126 13196	100nF 10% X7R 25V
2229	5322 122 32531	100pF 5% NP0 50V
2230	5322 122 32531	100pF 5% NP0 50V
2231	4822 126 13196	100nF 10% X7R 25V
2232	4822 126 13196	100nF 10% X7R 25V
2235	5322 122 34123	1nF 10% X7R 50V
2236	5322 122 34123	1nF 10% X7R 50V
2237	4822 124 23279	22µF 20% 16V
2238	4822 124 80453	100µF 10V 20%
2239	4822 124 80453	100µF 20% 10V
2240	4822 124 23279	22µF 20% 16V
2241	4822 126 14043	1µF +80- 20% 16V
2242	4822 124 23279	22µF 20% 16V
2243	4822 124 23282	1µF 20% 50V
2244	5322 122 34123	1nF 10% X7R 50V
2245	5322 122 32448	10pF 5% 50V
2246	5322 122 32448	10pF 5% 50V
2247	5322 122 34123	1nF 10% X7R 50V
2248	4822 122 33575	220pF 5% NPO 50V
2249	4822 122 33575	220pF 5% NPO 50V
2250	5322 122 32531	100pF 5% NP0 50V
2251	5322 122 32531	100pF 5% NP0 50V
2252	4822 126 13849	220N 16V 10% 0805 X7R
2253	4822 126 13849	220N 16V 10% 0805 X7R
2254	4822 126 13196	100nF 10% X7R 25V

2255	4822 124 23279	22µF 20% 16V
2256	4822 124 22646	47µF 20%
2257	4822 126 14043	1µF +80- 20% 16V
2258	4822 126 14043	1µF +80- 20% 16V
2261	4822 124 41017	10µF 16V
2262	5322 122 34123	1nF 10% X7R 50V
2264	4822 124 41017	10µF 16V
2265	5322 122 34123	1nF 10% X7R 50V
2267	4822 124 41017	10µF 16V
2268	5322 122 34123	1nF 10% X7R 50V
2270	4822 124 41017	10µF 16V
2271	5322 122 34123	1nF 10% X7R 50V
2275	5322 122 32448	10pF 5% 0805
2276	5322 122 32659	33pF 5% 0805
2280	4822 126 13849	220N 16V 10% 0805 X7R
2281	4822 126 13196	100nF 10% X7R 25V
2282	4822 126 13849	220N 16V 10% 0805 X7R
2283	4822 122 33514	68pF 5% 0805
2284	4822 126 13196	100nF 10% X7R 25V
2285	4822 122 33514	68pF 5% 0805
2286	4822 126 13196	100nF 10% X7R 25V
2287	5322 122 32654	22N 10% 0805 X7R
2300	4822 124 22646	47U 16V 20%
2301	4822 124 22646	47U 16V 20%
2302	4822 124 41017	10µF 16V
2303	4822 126 14043	1µF +80- 20% 16V
2304	4822 126 14043	1µF +80- 20% 16V
2305	4822 126 14043	1µF +80- 20% 16V
2306	4822 126 14043	1µF +80- 20% 16V
2308	4822 124 80769	2200µF 20% 16V
2311	5322 122 32268	470pF 5% 0805 NPO
2313	5322 122 32268	470pF 10% 50V
2314	5322 122 32268	470pF 10% 50V
2315	5322 122 32268	470pF 10% 50V
2316	5322 126 10223	4,7nF 10% X7R 63V
2317	4822 126 13196	100nF 10% X7R 25V
2318	5322 126 10223	4,7nF 10% X7R 63V
2319	4822 126 13196	100nF 10% X7R 25V
2320	4822 126 13196	100nF 10% X7R 25V
2321	5322 122 34098	10nF 10% X7R 63V
2322	5322 122 34098	10nF 10% X7R 63V
2323	5322 122 34098	10nF 10% X7R 63V
2324	5322 122 34098	10nF 10% X7R 63V
2325	5322 122 34098	10nF 10% X7R 63V
2326	5322 122 34098	10nF 10% X7R 63V
2327	5322 122 34098	10nF 10% X7R 63V
2328	5322 122 34098	10nF 10% X7R 63V
2329	5322 122 34098	10nF 10% X7R 63V
2401	5322 126 10223	4,7nF 10% X7R 63V
2402	4822 122 33342	33nF 10% X7R 63V
2405	4822 124 80769	2200µF 20% 16V
2407	5322 122 32268	470pF 10% 50V
2408	4822 126 13849	220nF 10% 16V
2409	4822 126 13849	220nF 10% 16V
2410	4822 124 80766	1000µF 20% 25V
2411	4822 124 80453	100µF 20% 10V
2412	4822 124 23281	33µF 20% 16V
2413	4822 126 13343	47N 25V 10% 0805 X7R
2414	4822 124 23282	1µF 20% 50V
2415	4822 122 33575	220pF 5%NPO 50V

2416	4822 124 22646	47µF 16V 20%
2417	4822 126 14043	1µF +80- 20% 16V
2418	4822 126 13849	220nF 10% 16V
2419	5322 126 10223	4,7nF 10% X7R 63V
2420	4822 126 13196	100nF 10% X7R 25V
2421	4822 126 14043	1µF +80- 20% 16V
2423	5322 122 32654	22nF 50V 10% 0805 X7R
2425	4822 126 13849	220nF 16V 10% 0805 X7R
2426	4822 126 13343	47nF 25V 10% 0805 X7R
2428	5322 122 34098	10nF 10% X7R 63V
2429	5322 122 34098	10nF 10% X7R 63V
2432	5322 122 34098	10nF 10% X7R 63V
2433	5322 122 34098	10nF 10% X7R 63V
2434	4822 126 13196	100nF 25V 10% 0805 X7R
2516	5322 122 33869	15pF 5%NP0 63V
2517	5322 122 33869	15pF 5%NP0 63V
2552	4822 122 33342	33nF 50V 10% 0805 X7R
2553	4822 126 13196	100nF 25V 10% 0805 X7R
2554	4822 126 13196	100nF 25V 10% 0805 X7R
2561	5322 122 34098	10nF 10% X7R 63V
2577	4822 122 33342	33nF 10% X7R 63V
2578	4822 122 33342	33nF 50V 10% 0805 X7R
2650	5322 122 34098	10nF 10% X7R 63V
2651	4822 126 13196	100nF 25V 10% 0805 X7R
2653	5322 122 34123	1nF 10% X7R 50V
2654	5322 122 34123	1nF 10% X7R 50V
2655	5322 122 34123	1nF 10% X7R 50V
2656	5322 122 33869	15pF 5%NP0 63V
2657	5322 122 33869	15pF 5%NP0 63V
2700	4822 124 41017	10µF 16V 20%
2701	4822 124 41017	10µF 16V 20%
2702	5322 122 34098	10nF 10% X7R 63V
2703	5322 122 34098	10nF 10% X7R 63V
2704	4822 124 80453	100µF 10V 20%
2705	5322 122 32654	22nF 10% 0805 X7R
2706	4822 124 41017	10µF 16V 20%
2707	4822 124 80453	100µF 10V 20%
2708	5322 116 80853	560pF 5% 0805 NP0
2709	5322 116 80853	560pF 5% 0805 NP0
2710	5322 116 80853	560pF 5% 0805 NP0
2711	5322 116 80853	560pF 5% 0805 NP0
2740	4822 126 13196	100nF 10% X7R 25V
2800	4822 124 41017	10µF 16V 20%
2801	5322 122 34123	1N 50V 10% 0805 X7R
2808	5322 122 32268	470pF 10% 50V
2809	5322 122 32268	470pF 10% 50V
2810	5322 122 32268	470pF 10% 50V
2811	5322 122 32268	470pF 10% 50V
2812	5322 122 32268	470pF 10% 50V
2813	5322 122 32268	470pF 10% 50V
2814	5322 122 32268	470pF 10% 50V
2835	4822 122 33128	15nF 10% X7R 63V
2836	5322 122 32654	22nF 10% X7R 63V
2837	4822 126 13693	56pF 1% NP0 63V
2838	5322 122 32452	47pF 5% NP0 63V
2850	5322 122 34123	1nF 10% X7R 50V
2853	5322 122 34123	1nF 10% X7R 50V
2854	5322 122 34098	10nF 10% X7R 63V
2856	5322 122 32531	100pF 5% NP0 50V
2857	5322 122 32531	100pF 50V 5% 0805 NPO

2858	5322 122 32531	100pF 5%NP0 50V
3174	4822 051 20332	3K3 5% RST SM 0805
3175	4822 051 20102	1KΩ 5% 0,1W
3178	4822 051 20008	0Ω JUMP. (0805)
3179	4822 051 20008	0Ω JUMP. (0805)
3186	4822 117 11449	2K2 1% 0,1W
3192	4822 051 20008	0Ω JUMP. (0805)
3201	4822 051 20273	27KΩ 5% SM 0805
3202	4822 051 20273	27KΩ 5% SM 0805
3203	4822 117 11449	2K2 1% 0,1W
3204	4822 117 11449	2K2 1% 0,1W
3205	4822 117 10833	10KΩ 1% 0,1W
3206	4822 117 11503	220R 1% 0.1W
3207	4822 051 20101	100Ω 5% 0,1W
3208	4822 051 20101	100Ω 5% 0,1W
3209	4822 051 20104	100KΩ 5% 0,1W
3210	4822 051 20332	3K30 5% 0,1W
3211	4822 051 20332	3K30 5% 0,1W
3212	4822 117 10833	10KΩ 1% 0,1W
3213	4822 051 20562	5K60 5% 0,1W
3214	4822 051 20101	100Ω 5% 0,1W
3215	4822 051 20008	0Ω JUMP. (0805)
3216	4822 051 20272	2K70 5% 0,1W
3217	4822 051 20101	100Ω 5% 0,1W
3218	4822 051 20272	2K70 5% 0,1W
3219	4822 051 20272	2K70 5% 0,1W
3220	4822 051 20101	100Ω 5% 0,1W
3221	4822 051 20101	100Ω 5% 0,1W
3222	4822 051 20272	2K70 5% 0,1W
3223	4822 051 20183	18KΩ 5% 0,1W
3224	4822 051 20102	1KΩ 5% 0,1W
3225	4822 051 20473	47KΩ 5% RST SM 0805
3226	4822 117 11503	220R 1% 0.1W
3227	4822 117 11503	220R 1% 0.1W
3228	4822 051 20273	27KΩ 5% 0,1W
3231	4822 051 20473	47KΩ 5% RST SM 0805
3234	4822 117 11503	220R 1% 0.1W
3235	4822 117 11503	220R 1% 0.1W
3236	4822 051 20101	100Ω 5% 0,1W
3241	4822 051 20105	1M00 5% 0,1W
3260	4822 051 20223	22KΩ 5% 0,1W
3262	4822 051 20182	1K80 5% 0,1W
3263	4822 051 20223	22KΩ 5% 0,1W
3265	4822 051 20182	1K80 5% 0,1W
3266	4822 051 20223	22KΩ 5% 0,1W
3268	4822 051 20182	1K80 5% 0,1W
3269	4822 051 20223	22KΩ 5% 0,1W
3271	4822 051 20182	1K80 5% 0,1W
3274	4822 051 20122	1k20 5% 0,1W
3275	4822 051 20472	4k7 5% 0,1W
3276	4822 117 11139	1k5 5% 0805
3277	4822 051 20122	1k20 5% 0,1W
3278	4822 117 11449	2K2 1% 0,1W
3279	4822 117 10833	10KΩ 1% 0,1W
3280	4822 051 20473	47KΩ 5% SM 0805
3282	4822 051 20331	330Ω 5% 0805
3283	4822 051 20331	330Ω 5% 0805

3284	4822 051 20331	330Ω 5% 0805
3285	4822 051 20478	4Ω7 5% 0805
3286	4822 117 10833	10KΩ 1% 0,1W
3287	4822 117 10833	10KΩ 1% 0,1W
3288	4822 051 20333	33KΩ 5% 0,1W
3289	4822 117 11383	12KΩ 5% 0805
3290	4822 117 11383	12KΩ 5% 0805
3291	4822 051 20272	2K70 5% 0,1W
3292	4822 051 20109	10Ω 5% 0,1W
3300	4822 051 20153	15KΩ 5% RST SM 0805
3301	4822 051 20223	22KΩ 5% 0,1W
3302	4822 051 20332	3K30 5% 0,1W
3304	4822 051 20473	47KΩ 5% 0,1W
3305	4822 051 20473	47KΩ 5% 0,1W
3306	4822 051 20101	100Ω 5% 0,1W
3307	4822 051 20223	22KΩ 5% 0,1W
3308	4822 051 10008	JUMP MAX 0R05
3312	4822 051 20008	JUMP MAX 0R05
3313	4822 051 20008	JUMP MAX 0R05
3316	4822 051 20153	15KΩ 5% RST SM 0805
3317	4822 051 20109	10Ω 5% 0,1W
3318	4822 051 20109	10Ω 5% 0,1W
3319	4822 051 20109	10Ω 5% 0,1W
3320	4822 051 20109	10Ω 5% 0,1W
3321	4822 051 20109	10Ω 5% 0,1W
3322	4822 051 20109	10Ω 5% 0,1W
3323	4822 051 20109	10Ω 5% 0,1W
3324	4822 051 20109	10Ω 5% 0,1W
3325	4822 051 20153	15KΩ 5% RST SM 0805
3326	4822 051 20153	15KΩ 5% RST SM 0805
3329	4822 116 40255	470R 50% PTC 16V
3330	4822 051 20473	47KΩ5% RST SM 0805
3341	4822 051 10008	JUMP MAX 0R05
3342	4822 051 20473	47KΩ 5% 0,1W
3343	4822 051 20008	JUMP MAX 0R05
3404	4822 051 20224	220KΩ 5% 0,1W
3405	4822 051 20104	100KΩ 5% 0,1W
3406	4822 051 20154	150KΩ 5% 0,1W
3408	4822 051 20273	27KΩ 5% 0,1W
3411	4822 051 20473	47KΩ 5% 0,1W
3412	4822 051 20101	100Ω 5% 0,1W
3413	4822 051 20102	1KΩ5% RST SM 0805
3414	4822 116 40267	3R3 25% 20V
3417	4822 051 20154	150KΩ 5% 0,1W
3422	4822 051 20473	47KΩ5% RST SM 0805
3423	4822 051 20008	JUMP MAX 0R05
3430	4822 051 20109	10Ω 5% 0,1W
3432	4822 051 20473	47KΩ 5% 0,1W
3433	4822 051 20473	47KΩ 5% 0,1W
3442	4822 051 20224	220KΩ 5% 0,1W
3447	4822 051 20224	220KΩ 5% 0,1W
3451	4822 051 20224	220KΩ 5% 0,1W
3454	4822 051 20224	220KΩ 5% 0,1W
3458	4822 051 20104	100KΩ 5% 0,1W
3460	4822 117 10833	10KΩ1% 0,1W
3463	4822 051 20224	220KΩ 5% 0,1W
3464	4822 051 20224	220KΩ 5% 0,1W
3465	4822 117 10833	10KΩ1% 0,1W
3468	4822 051 20008	0Ω JUMP. (0805)
3470	4822 051 20104	100KΩ 5% 0,1W

3471	4822 051 20224	220KΩ 5% 0,1W
3472	4822 051 20102	1KΩ 5% 0,1W
3473	4822 051 20473	47KΩ 5% 0,1W
3474	4822 051 20109	10Ω 5% 0,1W
3475	4822 051 20109	10Ω 5% 0,1W
3485	4822 051 20224	220KΩ 5% 0,1W
3486	4822 051 20273	27KΩ 5% 0,1W
3487	4822 117 10833	10KΩ % RST SM 0805
3488	4822 117 10833	10KΩ 5% RST SM 0805
3489	4822 051 20224	220KΩ 5% RST SM 0805
3516	4822 051 20101	100Ω 5% 0,1W
3517	4822 051 20101	100Ω 5% 0,1W
3523	4822 051 20472	4K70 5% 0,1W
3524	4822 051 20472	4K70 5% 0,1W
3525	4822 051 20473	47KΩ 5% 0,1W
3526	4822 051 20473	47KΩ 5% 0,1W
3551	4822 051 20008	JUMP MAX 0R05
3556	4822 051 20223	22KΩ 5% RST SM 0805
3557	4822 051 20473	47KΩ 5% 0,1W
3558	4822 051 20473	47KΩ 5% 0,1W
3567	4822 051 20473	47KΩ 5% 0,1W
3568	4822 051 20101	100Ω 5% 0,1W
3569	4822 051 20273	27KΩ 5% 0,1W
3571	4822 051 20471	470Ω 5% 0,1W
3572	4822 051 20104	100KΩ 5% 0,1W
3574	4822 051 20473	47KΩ5% RST SM 0805
3576	4822 051 20223	22KΩ 5% 0,1W
3577	4822 051 20223	22KΩ 5% RST SM 0805
3578	4822 051 20223	22KΩ 5% 0,1W
3580	4822 117 10833	10KΩ 5% RST SM 0805
3581	4822 117 10833	10KΩ 5% RST SM 0805
3588	4822 117 10833	10KΩ1% 0,1W
3589	4822 117 10833	10KΩ1% 0,1W
3592	4822 051 20008	JUMP MAX 0R05
3593	4822 051 20223	22KΩ 5% 0,1W
3594	4822 051 20223	22KΩ 5% 0,1W
3595	4822 051 20473	47KΩ 5% 0,1W
3596	4822 051 20473	47KΩ 5% 0,1W
3597	4822 051 20102	1KΩ 5% 0,1W
3598	4822 051 20223	22KΩ5% RST SM 0805
3652	4822 051 20102	1KΩ 5% 0,1W
3658	4822 116 40221	8Ω2 20%
3659	4822 051 20101	100Ω 5% 0,1W
3660	4822 116 40221	8Ω2 20%
3673	4822 051 20473	47KΩ 5% 0,1W
3700	4822 051 20273	27KΩ5% RST SM 0805
3702	4822 051 20122	1K20 5% 0,1W
3703	4822 051 20334	330KΩ 5% 0,1W
3704	4822 051 20822	8K20 5% 0,1W
3705	4822 051 20183	18KΩ 5% 0,1W
3709	4822 051 20334	330KΩ 5% 0,1W
3710	4822 051 20822	8K20 5% 0,1W
3711	4822 051 20122	1K20 5% 0,1W
3712	4822 051 20104	100KΩ 5% 0,1W
3713	4822 051 20104	100KΩ 5% 0,1W
3714	4822 051 20104	100KΩ 5% 0,1W
3715	4822 051 20104	100KΩ 5% 0,1W
3716	4822 051 20109	10Ω 5% 0,1W
3738	4822 051 20008	0Ω JUMP. (0805)
3740	4822 051 20008	JUMP MAX 0R05

3742	4822 051 20008	0Ω JUMP. (0805)
3750	4822 051 20008	0Ω JUMP. (0805)
3757	4822 051 20008	0Ω JUMP. (0805)
3762	4822 051 20008	JUMP MAX 0R05
3764	4822 051 20473	47KΩ5% RST SM 0805
3765	4822 051 20224	220KΩ 5% 0,1W
3766	4822 051 20473	47KΩ5% RST SM 0805
3767	4822 051 20008	0Ω JUMP. (0805)
3768	4822 051 20008	0Ω JUMP. (0805)
3769	4822 051 20008	0Ω JUMP. (0805)
3800	4822 051 20182	1K8 5% RST SM 0805
3801	4822 051 20472	4K7 5% RST SM 0805
3802	4822 117 11139	1K5 5% RST SM 0805
3804	4822 051 20121	120R 5% RST SM 0805
3810	4822 051 20008	0Ω JUMP. (0805)
3812	4822 051 20102	1KΩ5% RST SM 0805
3813	4822 117 10833	10KΩ1% 0,1W
3814	4822 051 20473	47KΩ5% RST SM 0805
3815	4822 051 20473	47KΩ5% RST SM 0805
3816	4822 051 20473	47KΩ5% RST SM 0805
3817	4822 051 20473	47KΩ5% RST SM 0805
3818	4822 051 20473	47KΩ5% RST SM 0805
3819	4822 051 20223	22KΩ5% RST SM 0805
3822	4822 051 20104	100KΩ5% RST SM 0805
3824	4822 117 10833	10KΩ5% RST SM 0805
3825	4822 051 20331	330Ω 5% 0,1W
3828	4822 051 20101	100R 5% RST SM 0805
3830	4822 117 11503	220R 1% 0.1W
3831	4822 117 11503	220R 1% 0.1W
3832	4822 051 20331	330Ω 5% 0,1W
3834	4822 051 20102	1KΩ 5% 0,1W
3835	4822 117 11449	2K2 1% 0,1W
3837	4822 051 20102	1KΩ 5% 0,1W
3838	4822 051 20102	1KΩ 5% 0,1W
3839	4822 051 20105	1M00 5% 0,1W
3840	4822 051 20102	1KΩ 5% 0,1W
3841	4822 051 20102	1KΩ 5% 0,1W
3843	4822 051 20008	JUMP MAX 0R05
3848	4822 051 20473	47KΩ5% RST SM 0805
3849	4822 051 20473	47KΩ5% RST SM 0805
3850	4822 051 20008	JUMP MAX 0R05
3852	4822 117 10833	10KΩ1% 0,1W
3854	4822 051 20008	0Ω JUMP. (0805)
3855	4822 051 20104	100KΩ 5% 0,1W
3856	4822 051 20223	22KΩ5% RST SM 0805
3857	4822 051 20333	33KΩ 5% 0,1W
3858	4822 051 20008	0Ω JUMP. (0805)
3863	4822 051 20101	100Ω 5% 0,1W
3864	4822 051 20104	100KΩ 5% 0,1W
3865	4822 051 20101	100Ω 5% 0,1W
3866	4822 051 20101	100Ω 5% 0,1W
3868	4822 051 20471	470R 5% RST SM 0805
3872	4822 051 20101	100Ω 5% 0,1W

5172	4822 157 10975	120UH 10%
5173	4822 157 71184	10U 10% ELO405
5174	4822 157 71206	BLM21A10PT
5175	4822 157 71206	BLM21A10PT
5200	4822 157 71206	BLM21A10PT

5201	4822 242 10565	K1101-95880 (36.860MHZ)
5202	4822 157 71184	10UH 10%
5203	4822 157 10976	68UH 10%
5204	4822 157 71206	BLM21A10PT
5205	4822 157 10977	4,7UH 10%
5275	4822 242 81583	11MHz289 AT-51 30P
5276	4822 157 71206	BLM21A10PT
5277	4822 157 71206	BLM21A10PT
5278	4822 157 71206	BLM21A10PT
5400	4822 157 70935	
5401	4822 157 11206	LALO4 0U22
5501	4822 157 71206	BLM21A10PT
5503	4822 157 71206	BLM21A10PT
5650	4822 242 10709	
5651	4822 157 71206	BLM21A10PT
5835	4822 242 81583	LN-G8-238

6200	4822 130 10654	BAT254
6201	4822 130 83757	DIO SIG SM BAS216
6300	4822 130 83757	DIO SIG SM BAS216
6401	4822 130 10488	S3G
6402	4822 130 10655	1SR154-400
6403	4822 130 10655	1SR154-400
6406	4822 130 10656	UDZ20B
6407	4822 130 10655	1SR154-400
6408	4822 130 10655	1SR154-400
6410	4822 130 83757	DIO SIG SM BAS216
6411	4822 130 10654	BAT254
6412	4822 130 10655	1SR154-400
6413	4822 130 10654	BAT254
6414	4822 130 83757	BAS216
6415	4822 130 83757	BAS216
6418	4822 130 83757	BAS216
6419	4822 130 83757	BAS216
6422	4822 130 83757	BAS216
6423	4822 130 83757	BAS216
6425	4822 130 83757	BAS216
6426	4822 130 83757	BAS216
6427	4822 130 83757	BAS216
6432	4822 130 83757	BAS216
6653	4822 130 10657	PTZ
6654	4822 130 10657	PTZ
6741	4822 130 83757	BAS216
6800	4822 130 10837	DIO REG SM UDZ8.2B
6801	4822 130 10838	DIO REG SM UDZ3.3B
6803	4822 130 10185	UDZ5.6B
6804	4822 130 10185	UDZ5.6B
6805	4822 130 10185	UDZ5.6B
6807	4822 130 10185	UDZ5.6B
6809	4822 130 10185	UDZ5.6B
6810	4822 130 10185	UDZ5.6B
6850	4822 130 83757	BAS216
6852	4822 130 10185	UDZ5.6B
6853	4822 130 10185	UDZ5.6B

7172	4822 130 60511	TRA SIG SM BC847B
7200	4822 130 60511	TRA SIG SM BC847B
7201	4822 209 14813	SAA7701H/N108

7202	4822 209 33985	TDA8579T/N1
7260	4822 130 42615	BC817-40
7261	4822 130 42615	BC817-40
7262	4822 130 42615	BC817-40
7263	4822 130 42615	BC817-40
7275	4822 130 60511	BC847B
7276	4822 130 60511	BC847B
7277	4822 209 33397	SAA7366T
7302	4822 209 33629	TDA7375
7303	4822 209 33629	TDA7375
7304	4822 130 60511	BC847B
7306	5322 130 60508	TRA SIG SM BC857B
7400	5322 209 14482	IC SM HEF4069UBT
7401	4822 209 14814	L4949NP
7402	5322 209 14877	HEF4528BT
7404	4822 209 14815	IC VN06
7405	4822 209 90566	IC L4885CV
7406	4822 209 90567	IC L7805ABV
7410	4822 130 60511	BC847B
7418	4822 209 33162	MC4558IDT

7505	5322 130 60508	BC857B
7506	5322 209 11102	HEF4052BT
7511	4822 209 15512	EEprom RC578
7511	4822 209 15513	EEprom RC668
7511	4822 209 15514	EEprom RC688
7513	4822 209 15417	UP 89CE560-RC668/688
7513	4822 209 15433	UP 89CE560-RC548/578
7650	4822 209 32743	MSM6307GS-VK
7701	4822 209 15349	TEA0676T/V1
7745	4822 130 60511	BC847B
7800	4822 130 42132	TRA SIG SM BC 807
7802	4822 130 10659	2SD2039
7803	4822 130 60511	BC847B
7804	5322 130 60508	BC857B
7805	5322 130 60508	TRA SIG SM BC857B
7806	4822 130 60511	TRA SIG SM BC847B
7808	4822 130 60511	TRA SIG SM BC847B
7835	5322 209 11461	HEF4521BT
7850	4822 130 60511	BC847B

CORRECTIONS TO THE MECHANICAL PARTSLIST		
1800	4822 265 10914	CONNECTOR BLOCK ASSY FOR RC548
1800	4822 265 10899	CONNECTOR BLOCK ASSY FOR RC578/668/688

FRONT PARTS

Miscellaneous		
1927	4822 134 10014	115MA 5V ORANGE
1928	4822 134 10014	115MA 5V ORANGE
1929	4822 134 10015	115MA 5V GREEN
1930	4822 134 10015	115MA 5V GREEN
2900	5322 122 32654	22nF 10% X7R 63V
2901	5322 122 32654	22nF 10% X7R 63V
2902	5322 122 32654	22nF 10% X7R 63V
2903	5322 122 34123	1nF 10% X7R 50V
3900	4822 117 11449	2K2 1% 0,1W
3901	4822 051 20182	1K80 5% 0,1W
3902	4822 051 20471	470Ω 5% 0,1W
3903	4822 117 10353	150R 1% 0,1W
3904	4822 117 11139	1K5 1% 0,1W
3905	4822 117 11503	220R 1% 0.1W
3906	4822 117 11503	220R 1% 0.1W
3907	4822 117 11503	220R 1% 0.1W
3908	4822 117 10833	10KΩ1% 0,1W
3909	4822 051 20473	47KΩ 5% 0,1W
3911	4822 117 11449	2K2 1% 0,1W
3912	4822 051 20121	JUMP MAX 0R05
3919	4822 117 11449	2K2 1% 0,1W
3921	4822 117 10353	150R 1% 0,1W
3923	4822 051 20008	0Ω JUMP. (0805)
3924	4822 051 20184	180KΩ 5% 0,1W
3942	4822 117 10353	150R 1% 0,1W
3943	4822 117 10353	150R 1% 0,1W
3944	4822 117 10353	150R 1% 0,1W
3945	4822 117 10353	150R 1% 0,1W
3946	4822 117 10353	150R 1% 0,1W
3947	4822 051 20271	270Ω 5% 0,1W
3948	4822 117 11503	220R 1% 0.1W
3949	4822 117 11503	220R 1% 0.1W
3950	4822 117 11503	220R 1% 0.1W
3951	4822 117 11503	220R 1% 0.1W
3952	4822 117 11503	220R 1% 0.1W
3953	4822 051 20331	330Ω 5% 0,1W
3955	4822 051 20271	270Ω 5% 0,1W
3961	4822 117 10833	10KΩ1% 0,1W
3962	4822 051 20681	680Ω 5% 0,1W
3963	4822 051 20681	680Ω 5% 0,1W
3964	4822 051 20681	680Ω 5% 0,1W
3965	4822 051 20681	680Ω 5% 0,1W
3966	4822 117 10353	150R 1% 0,1W
3967	4822 051 20478	4R70 5% 0,1W
3968	4822 051 20101	100Ω 5% 0,1W
3969	4822 051 20101	100Ω 5% 0,1W
3971	4822 051 20271	270Ω 5% 0,1W
3972	4822 051 20101	100Ω 5% 0,1W
3973	4822 117 10833	10KΩ1% 0,1W
3977	4822 051 20221	22KΩ5% 0,1W

6900	4822 130 10185	UDZ5.6B
6901	4822 130 10185	UDZ5.6B
6902	4822 130 10185	UDZ5.6B

6904	4822 130 83757	BAS216
6905	4822 130 83757	BAS216
6907	4822 130 10186	LYT670-JK-E9231
6909	4822 130 10186	LYT670-JK-E9231
6911	4822 130 10186	LYT670-JK-E9231
6913	4822 130 10186	LYT670-JK-E9231
6915	4822 130 10186	LYT670-JK-E9231
6917	4822 130 10186	LYT670-JK-E9231
6919	4822 130 10186	LYT670-JK-E9231
6921	4822 130 10186	LYT670-JK-E9231
6923	4822 130 10186	LYT670-JK-E9231
6925	4822 130 10186	LYT670-JK-E9231
6927	4822 130 10186	LYT670-JK-E9231
6929	4822 130 10186	LYT670-JK-E9231
6931	4822 130 10186	LYT670-JK-E9231
6933	4822 130 10186	LYT670-JK-E9231
6935	4822 130 10186	LYT670-JK-E9231
6939	4822 130 10186	LYT670-JK-E9231
6941	4822 130 10186	LYT670-JK-E9231
6943	4822 130 10186	LYT670-JK-E9231
6945	4822 130 10186	LYT670-JK-E9231
6947	4822 130 10186	LYT670-JK-E9231
6949	4822 130 10186	LYT670-JK-E9231
6951	4822 130 10186	LYT670-JK-E9231
6953	4822 130 83757	BAS216
6954	4822 130 83757	BAS216
6955	4822 130 83757	BAS216
6956	4822 130 83757	BAS216
6957	4822 130 83757	BAS216
6958	4822 130 83757	BAS216

7900	5322 209 11578	PCF8574T
7901	5322 209 60424	74HC573D
7902	5322 130 60508	BC857B
7905	4822 130 42615	BC817-40
7906	4822 130 42615	BC817-40
7907	4822 130 60511	BC847B
7911	4822 209 15134	PCF8576CT/F1

Car cassette deck SCA

Version 4.4

Service
Service
Service

ERSATZTEILE
für Philips Car Systems
erhalten Sie bei:
KiVi Service GmbH
Windmühlenstr. 41 · 31178 Giesen/Emmerke
Tel.: 0 51 21 / 6 00 20 · Fax 0 51 21 / 60 02 54

Service Manual

12 V ⊖—|||

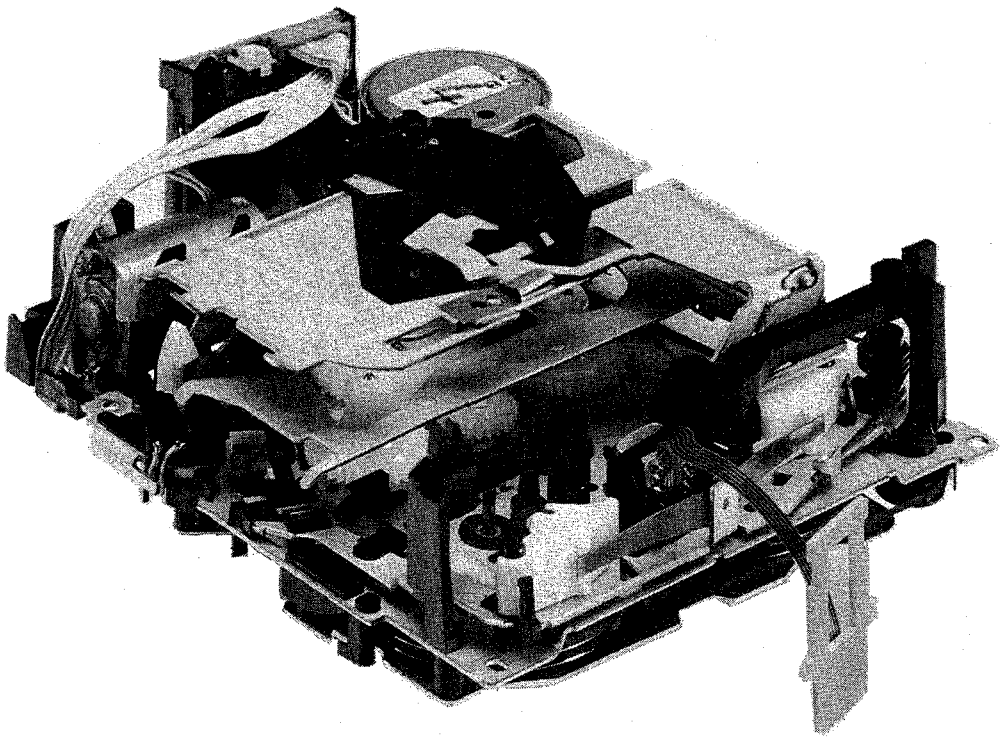

Published by Philips Car Systems Printed in The Netherlands © Copyright reserved Subject to modification 4822 725 23509

MECHANICAL SPECIFICATION

Operating positions:	Any position from horizontal to 45° standing vertically on the rear side.
Operating temperature:	-20°C to +70°C
Tape speed:	4,76 cm/sec
Wow and flutter:	< 0,5% unweighted
	< 0,3% weighted
Winding time:	
Test tape: RCA 118 (C60)	< 110 sec
Eject and loading time:	< 2 sec

ELECTRICAL SPECIFICATION

Voltage:	min 10,6 V max 16,0 V
Current - playback:	200 mA
Current - fast wind:	150 mA
Current - eject, standby:	100 µA
Hold in voltage:	8,0 V
Capstan motor:	14,4 V
Servo motor:	2 V DC Play
	11,5 V DC Fast, Servo
Playback Crosstalk	
ch. 1 - 2 / 3 - 4	> 36 dB
ch. 2 - 3	> 46 dB

FEATURES

The SCA-4.4 tape deck is usable in several sets. Most of the control functions depend on the hard- and software-configuration of the set in which the deck is installed.
The set µC can control soft eject, emergency eject, standby mode, reverse function, MSS, ME/FE and DOLBY indication.
Some versions of the deck could be equipped with a groved head and/or a preamplifier circuit.

HANDLING AND DEMOUNTING INSTRUCTIONS

GENERAL

- Protect the tape deck against ESD !
- Plastic catches and snap connections must be released careful with screwdriver or tweezers.
- Cables must be laid in the defined cable guidings after mounting.
- For lubrication see indications in the exploded view.
- To clean tape transport and head only use moist cleaning tapes or piece of cloth, take care that no fluid (alcohol) drops into the bearing.
- For transport lift/carrier assy must be in eject position, do not carry the deck by touching the lift/carrier.
- Use a screwdriver 2,5 mm with insulated shaft for adjusting drift.
- Screw the deck into the set in order: Front right, front left, rear left, rear right.

DEMOUNTING

1. Carrier/lift (44)
1.1 Lift in eject position - put leg of eject spring (12) into mounting position acc. fig. 8 and fig. 2 - J
1.2 Lift in play position - unclamp cassette holder (49) from eject lever (48) with a left-upwards motion acc. fig.1-B
1.3 Lift in eject position - push plastic hook (fig.1-D) and pull out eject lever, remember position of ejector spring (55) and switching pin (54) for re-assembly later on
1.4 Release fixation lever (fig.1-F) by clicking out in left direction and then turn to the right
1.5 Lift in mid position - take out carrier and lift by releasing plastic hooks at the left (fig.1-G)

2. Head support
2.1 Take out carrier/lift according 1.
2.2 Remove head carrier spring (37)
2.3 Turn head support fixation lever acc. fig.3-A
2.4 Position pin of switching lever (20) to max. left point, see fig.3-detail I
2.5 Release plastic snapper (fig.3-H) and take out head support assembly
!!! TAKE CARE NOT TO BENT THE HEAD CARRIER !!!
2.6 Press plastic fixation (fig.3-detail E,F) and take out magnetic head
2.7 Push pressure spring (27) acc. fig.3-D and move it out
2.8 Release plastic hooks (fig.3-B,C) to pull pinch rollers (45+68) out
2.9 Take off anchor spring (13), rotate anchor (2) 90°degrees to take it out (fig.4-A,B,C)

3. Capstan motor (32)
Remove belt (30) from driving wheel, desolder connection cables, unscrew the two torx screws at the bottom of chassis and take out capstan motor
!!! TAKE CARE OF CORRECT AND UNTWISTED MOUNTING OF THE BELT !!!

4. Servo motor (14)
Desolder connection cables and lever up motor out of its clamps (fig.2-F,G)

5. Clutch assy (57-59)
5.1 Remove servo motor acc. 4.
5.2 Cut disk (65) and remove it (must be renewed)
5.3 Pull clutch from the axle (fig.2-H,I)

6. Anchor holder (8) and magnet double (1)
6.1 Desolder cables of magnet
6.2 Swivel anchor holder counter-clockwise and press it off applying force near the pivoting point
6.3 Release plastic clamps of magnet holder and press magnet out from top of the chassis (fig.4-E)

7. Driving belt (30), flywheels (23) and bearings (70)
7.1 Release pivot plate (35) by turning the plastic hooks acc.fig.5-A,B
7.2 Remove pivot plate and driving belt
7.3 Pull out flywheels
7.4 Press bearings out of plastic housings from top side of chassis plate, use a plastic tool with diameter 4mm in order not to damage the housings
7.5 After mounting new flywheels, bearings or pivot plate you have to test wow and flutter because every deck is adjusted individual for these components. If the values of wow and flutter are out of specification, you have to exchange complete deck !
7.6 Degrease capstan axis after re-mounting the flywheels

8. Connection wheel (5), take up wheels (6), backtension springs (69)
8.1 Take out carrier/lift acc. 1.
8.2 Lever up connection wheel from axle (must be renewed)
8.3 Cut disks (65) and remove them (must be renewed)
8.4 Unclamp and pull up wheels with puller (fig.2-A,B)
8.5 Take out backtension springs

9. ME/CR Switch (60)
9.1 Desolder connection cables
9.2 Push with a small pin through the hole at the bottom of the chassis, directly under the switch

10. ON/OFF Switch (26)
10.1 Desolder connection cables
10.2 Lever up switch or push with a small pin through the hole at the bottom of the chassis, directly under the switch if servo motor and clutch were removed previously

11. Control pins (16), gear lever (17), play reverse lever (18)
11.1 Remove flywheels acc. 7
11.2 Remove play reverse lever
11.3 Put control pins into mounting position acc. fig.6-D,E
11.4 Take out gear lever
11.5 Pull out control pins

12. Switching lever (20), swivel wheel assembly (7,15,43)
12.1 Release spring (53) from black plastic pin
12.2 Turn switching lever acc. fig.7-A
12.3 Lever up switching lever from axle
12.4 Remove connection wheel acc. 8
12.5 Take out swivel wheel assembly

13. Switching pin (54), transport rod (25), latch (21)
13.1 Remove ON/OFF Switch acc. 10
13.2 Lever up switching pin from axle
13.3 Remove switching lever acc. 12
13.4 Move out transport rod and latch

TOOLS REQUIRED

Test cassette SBC 420	4822 397 30071
Test cassette SBC 419	4822 397 30069
Friction test cassette	4822 395 30054
Puller for clutch (fig.2)	4822 395 60039

ADJUSTMENTS

TORQUE OF REELS (FRICTION)

Adjust potmeter pos. 3409 until friction test cassette shows 9,5 +/- 1,5 mNm in NOR direction (after 2 minutes) and 8,5 +/- 1,5 mNm in REV direction. Backtension must be 0,3 to 0,7 mNm.
If values deviate check lubrication, clutch, take up wheels and backtension springs.

WOW AND FLUTTER, TAPE SPEED

Connect wow and flutter meter to loudspeaker outputs and play the 3150 Hz signal track of test cassette SBC 420. Value should be max. 0,5% (unweighted).
If value deviates check motors, pressure rollers, flywheels, belt, pulley and backtension springs.
Tape speed can be adjusted with motor potentiometer A (see fig.8). Use a screwdriver with insulated shaft !

PRESSURE ROLLER / CAPSTAN (see figures below)

Adjust clearance play-NOR position between pressure roller and stop head carrier

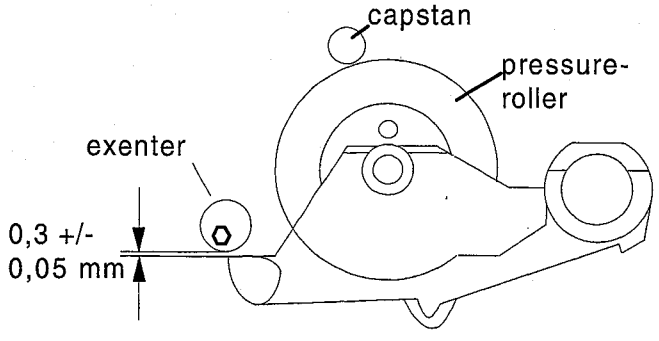

Adjust clearance FFW position between pressure roller and capstan

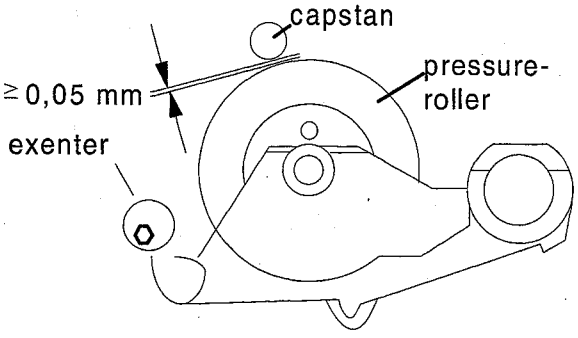

SCA-4.4

EJECTOR 48, HOLDER 49, LIFT 44

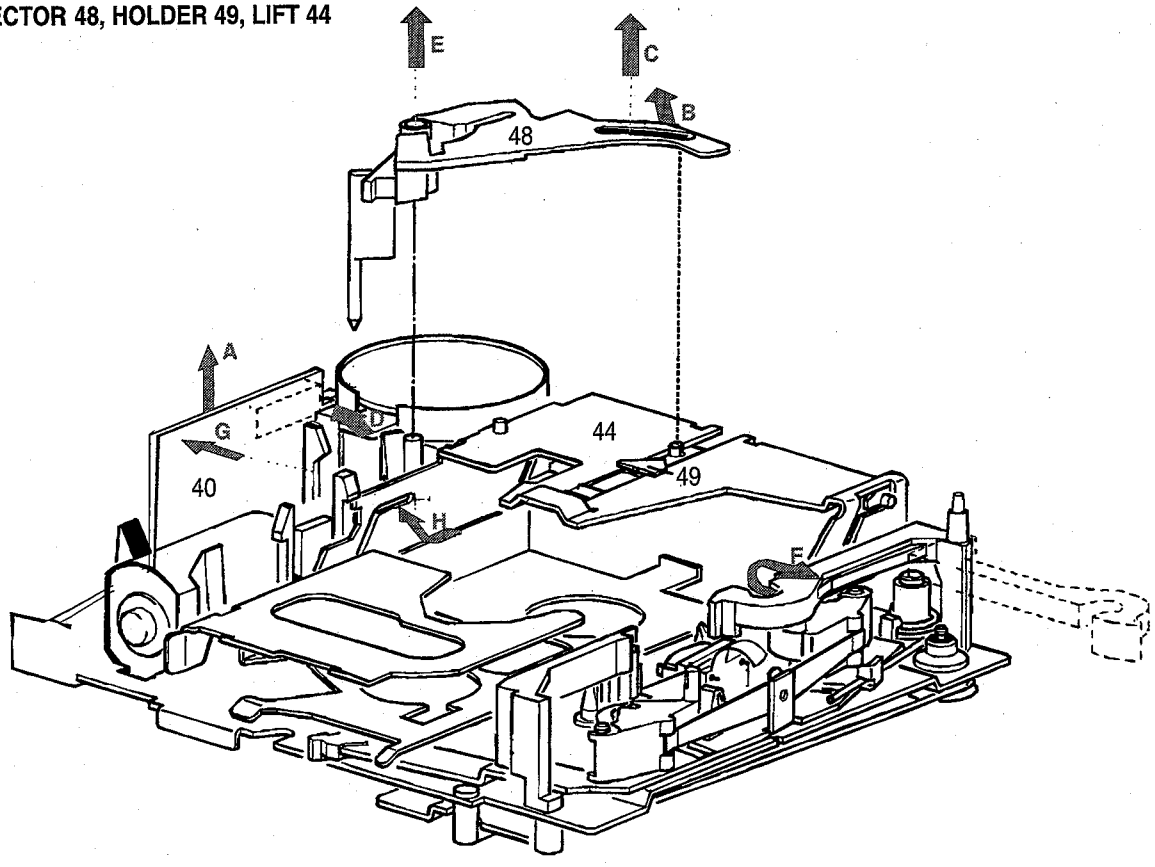

Fig. 1

CLUTCH 59, SWITCH 60, GEAR WHEEL 5, CARRIER 6

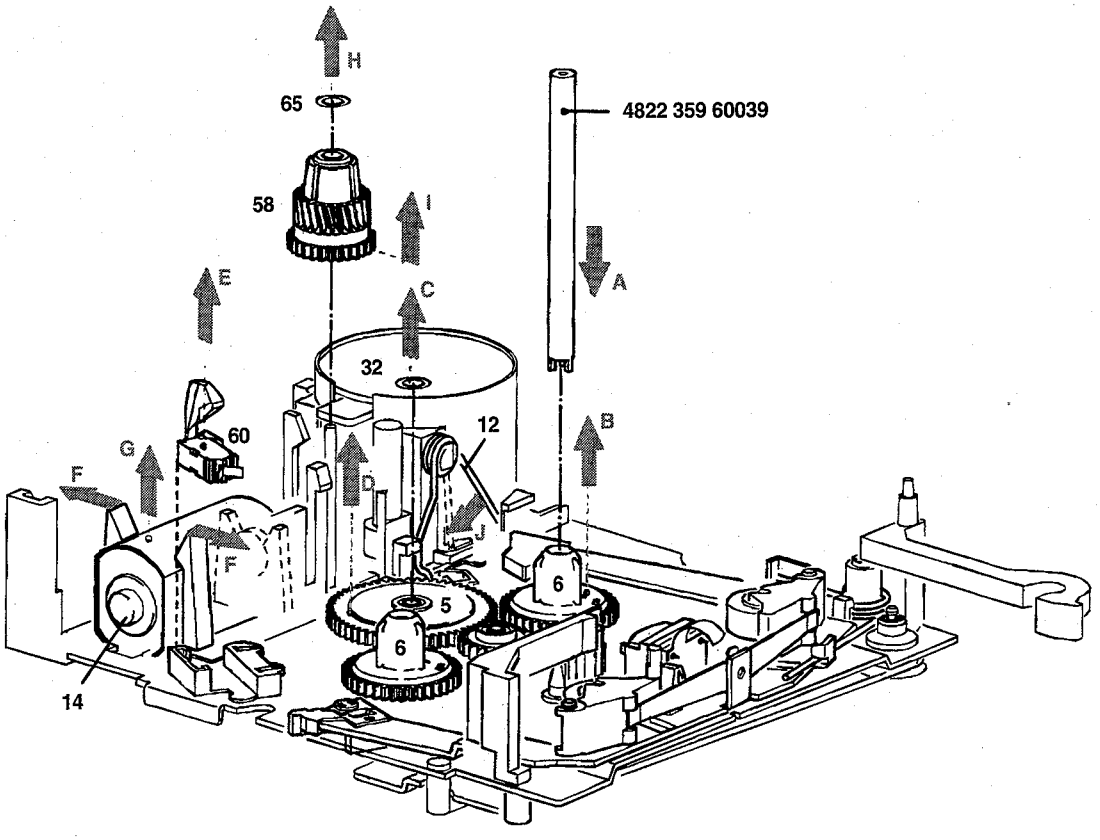

Fig. 2

PRESSURE ROLLER 45, HEAD BRACKET 33, HEAD 34

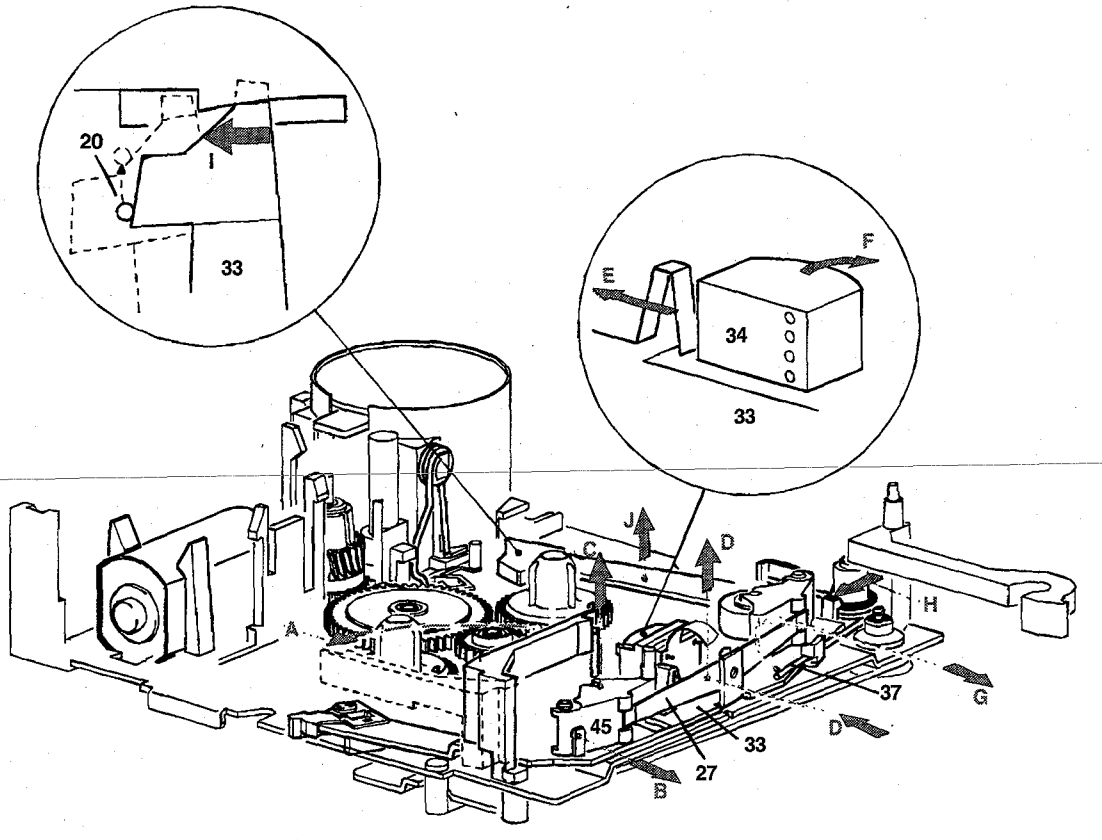

Fig. 3

ANCHOR 3/5, RELAY 1

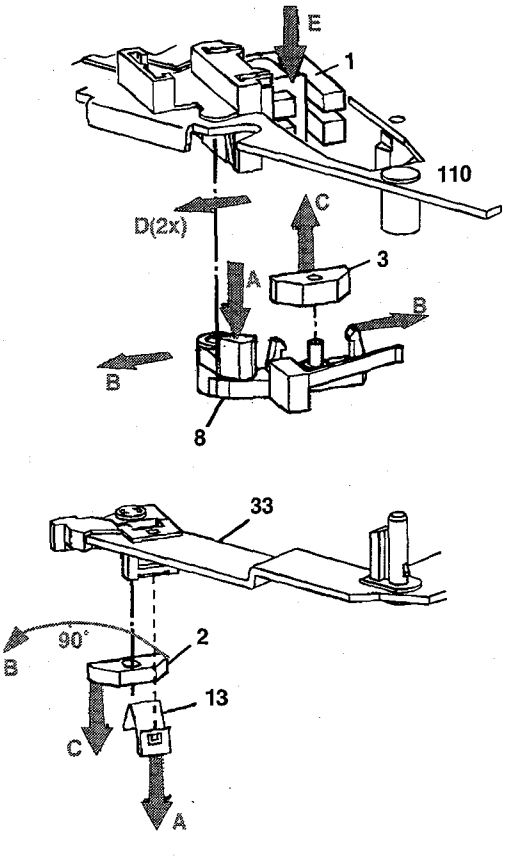

Fig. 4

FLYWHEEL 23, BELT 30

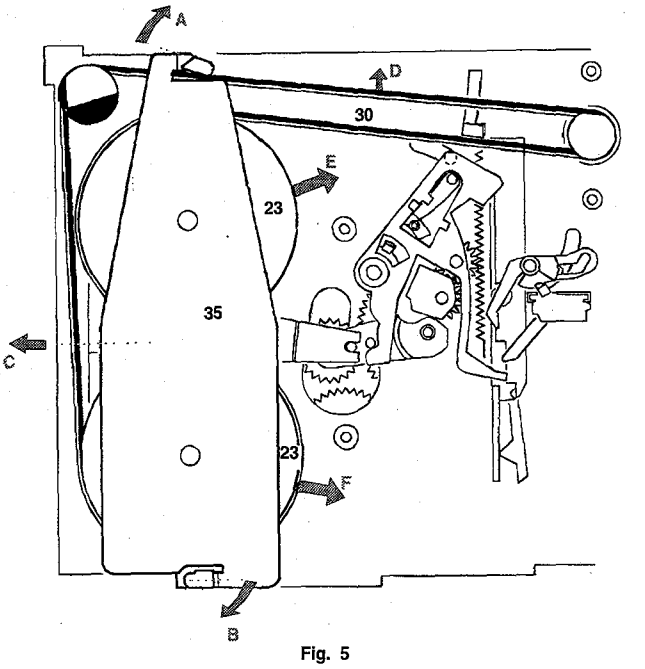

Fig. 5

SEGMENT 16, BRACKET 17, BEARING 70

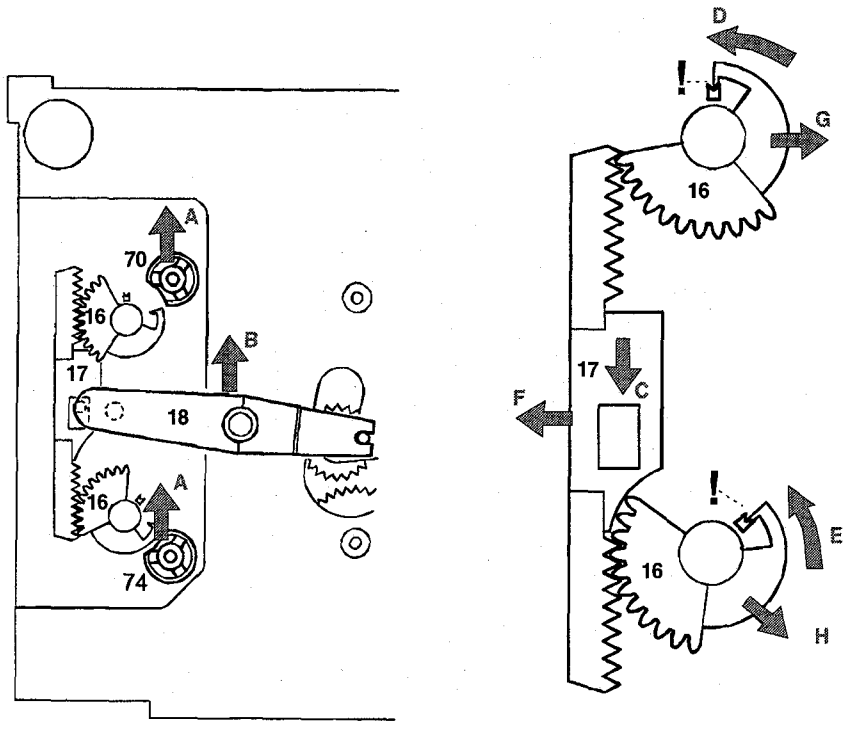

Fig. 6

SWITCH 26, SWIVEL GEAR 7, LEVER 20

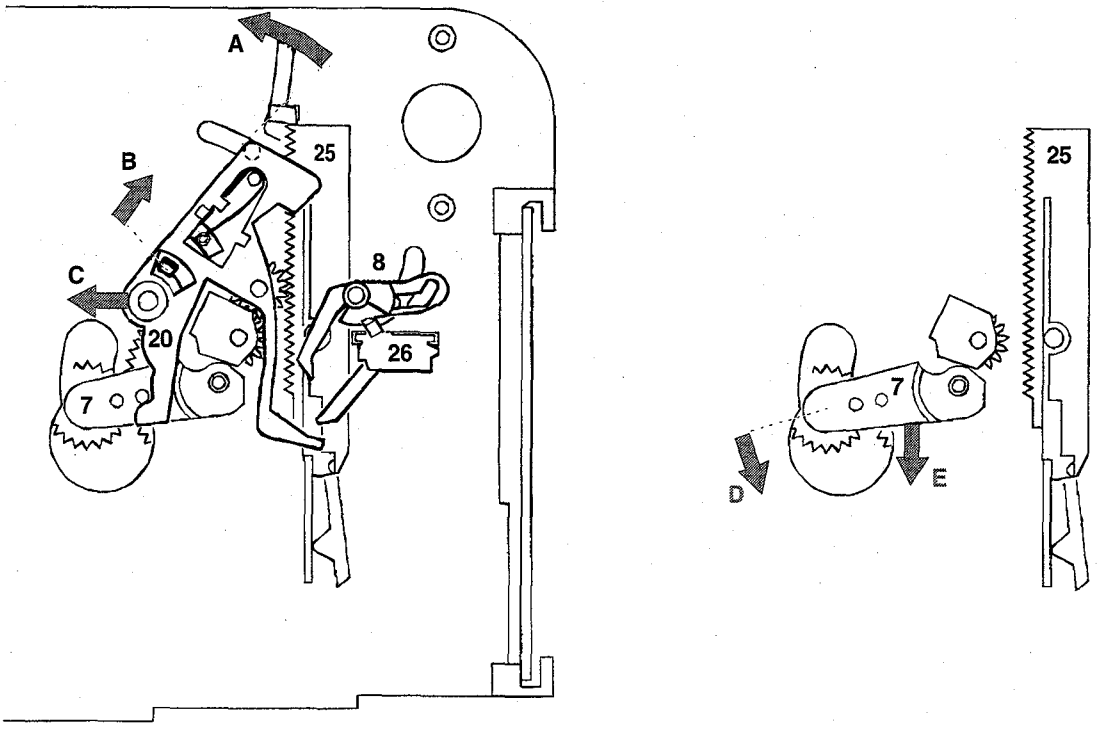

Fig. 7

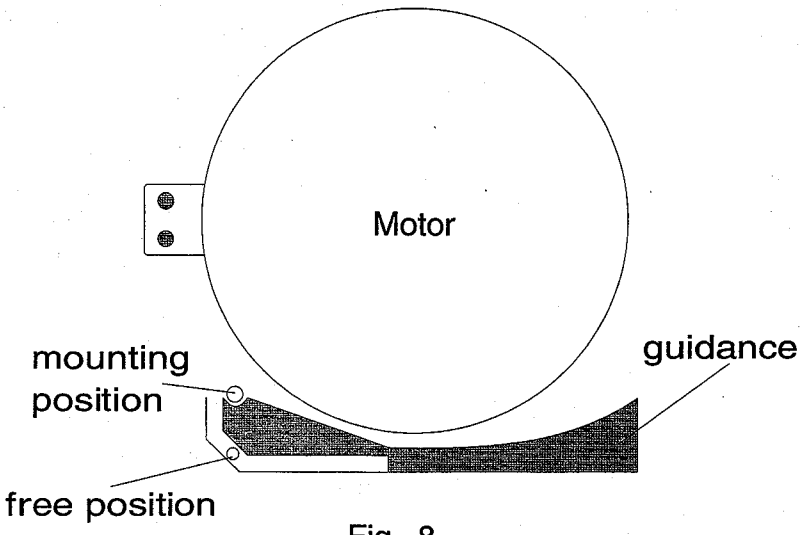

Fig. 8

1002	B 1	2402	E 5	2406	F 7	2414	E 5	3403	F 6	3407	E 7	3411	A 6	7401	C 4
1003	A 9	2403	E 5	2407	D 8	2415	E 3	3404	E 7	3408	A 5	3412	E 8	7402	C 8
2207	E 3	2404	C 8	2411	A 6	3401	E 6	3405	F 7	3409	E 6	5411	A 7	7411	A 7
2401	E 3	2405	F 6	2413	E 4	3402	E 6	3406	F 7	3410	D 8	5412	A 7	7412	A 7

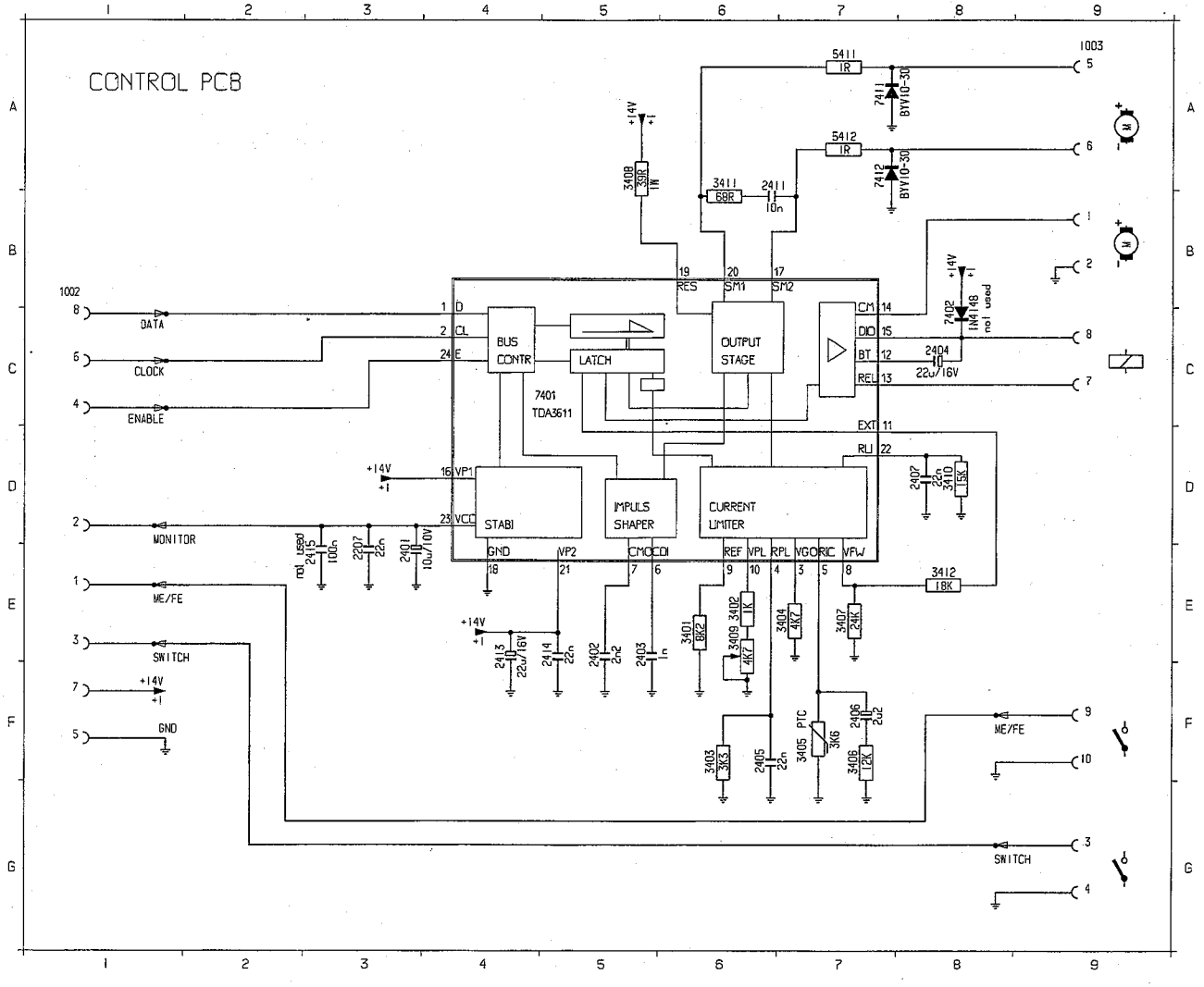

MEASUREMENTS ON CONTROL PCB

ME/FE: 0,0 V (FE) / 5,0 V (ME/CR)
ON/OFF: 0,0 V (ON) / 5,0 V (OFF)

Pos. 7401 TDA 3611

1: 5,0 V
2: 5,0 V
3: 0,7 V / 0,0 V (Sb)
4: 0,8 V (PN) / 0,9 V (PR) / 0,3 V (W) / 0,0 V (Sb)
5: 0,8 V (PN) / 1,0 V (PR) / 0,4 V (W) / 0,0 V (Sb) / 0,1 V (TA)
6: 0,8 V (PN) / 1,0 V (PR) / 0,4 V (W) / 0,0 V (Sb) / 0,1 V (TA)
7: 0,7 V (P) / 1,8 V (W) / 0,0 V (Sb) / 0,6 V (TA)
8: 3,4 V / 0,0 V (Sb)
9: 1,2 V / 0,0 V (Sb)
10: 0,5 V / 0,0 V (Sb)
11: 3,4 V / 0,0 V (Sb)
12: 12,0 V
13: 0,5 V / 12,0 V (Sb)
14: 0,0 V / 11,5 V (P)
15: 11,5 V / 12,0 V (Sb)
16: 12,0 V
17: 0,1 V (PN) / 2,4 V (PR) / 0,0 V (WN) / 12,0 V (WR) / 0,0 V (Sb)
18: GND
19: 12,0 V / 8,5 V (P)
20: 2,4 V (PN) / 0,1 V (PR) / 12,0 V (WN) / 0,0 V (WR) / 0,0 V (Sb)
21: 12,0 V
22: 3,6 V (P) / 1,3 V (W) / 0,0 V (Sb)
23: 5,0 V
24: 5,0 V

All values measured DC - GND

(P) = Play mode both directions
(W) = Wind mode both directions
(PN) = Play NOR direction
(PR) = Play REV direction
(WN) = Wind NOR direction
(WR) = Wind REV direction
(Sb) = Standby
(TA) = Traffic anouncement

1002 A 1 2413 A 1 3409 A 1
1003 A 1 2414 A 1 3410 A 1
2207 A 1 2415 A 1 3411 A 1
2401 A 1 3401 A 1 3412 A 1
2402 A 1 3402 A 1 5411 A 1
2403 A 1 3403 A 1 5412 A 1
2404 A 1 3404 A 1 7401 A 1
2405 A 1 3405 A 1 7402 A 1
2406 A 1 3406 A 1 7411 A 1
2407 A 1 3407 A 1 7412 A 1
2411 A 1 3408 A 1

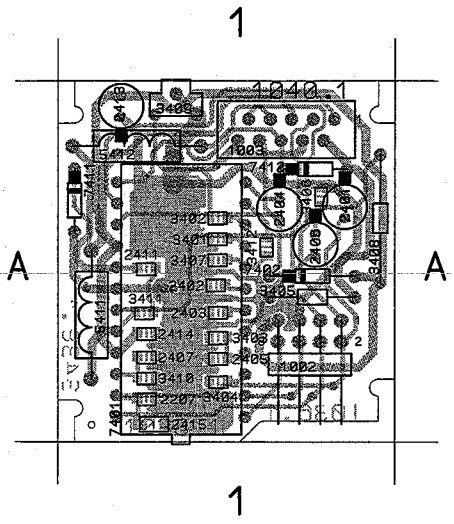

CONNECTORS

Control Connector
(View onto Radio-PCB)

MONITOR 2	○ ○	1 ME/FE (optional)
ENABLE 4	○ ○	3 ON/OFF Switch
CLOCK 6	○ ○	5 GND
DATA 8	○ ○	7 +14 V

Head Connector
(View onto Radio-PCB)

□	1 COMMON GND
□	2 LEFT NOR
□	3 RIGHT NOR
□	4 RIGHT REV
□	5 LEFT REV

Front of Radio ↓

Deck Connector (Pos.1003)
(View onto Control-PCB)

9 7 5 3 1
○ ○ ○ ○ ○
○ ○ ○ ○ ○
10 8 6 4 2

1: Capstan +
2: Capstan -
3: ON/OFF Switch
4: GND
5: Servomotor +
6: Servomotor -
7: Magnet -
8: Magnet +
9: ME/FE Switch
10: GND

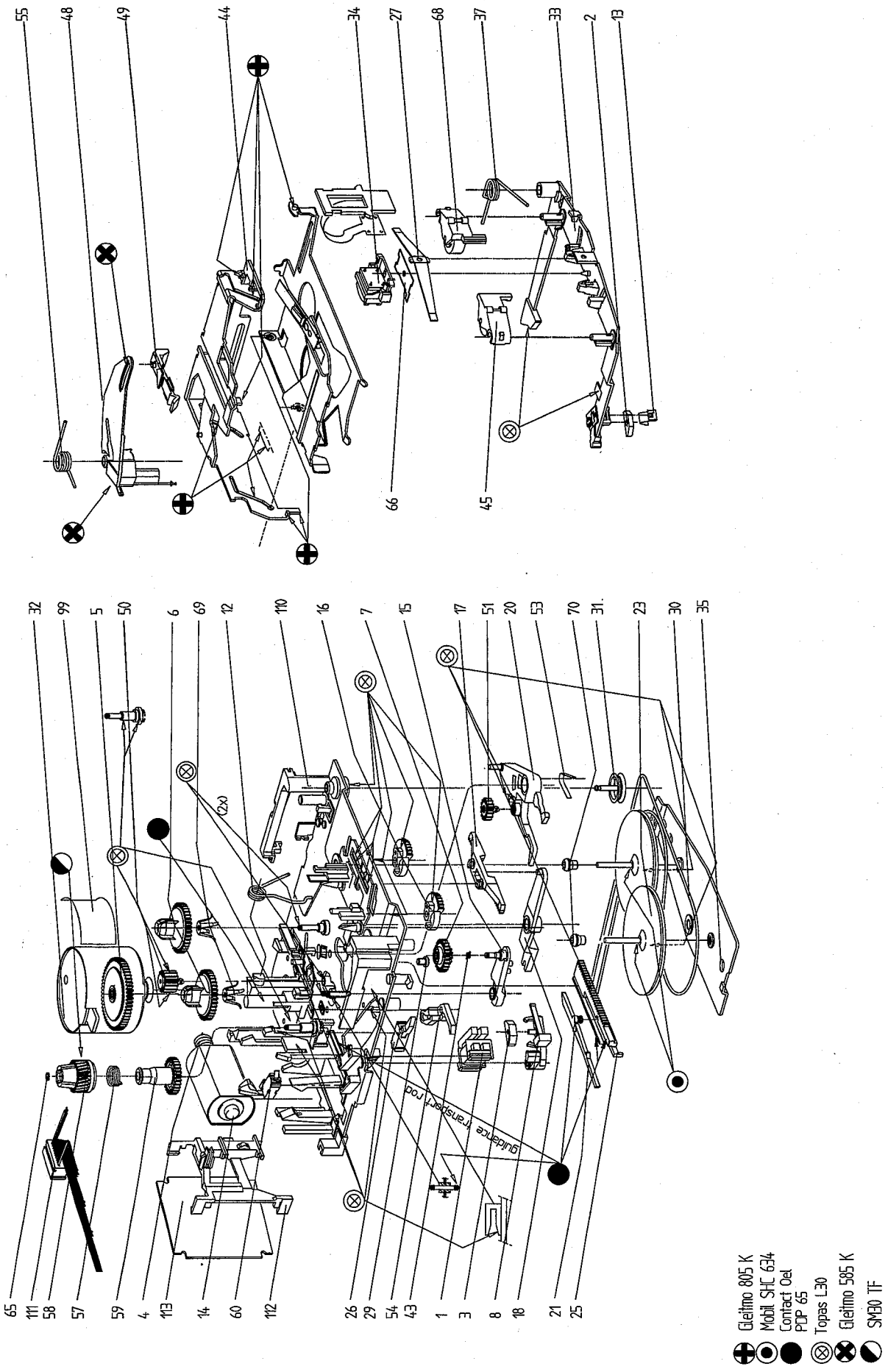
55 48 49 44 34 27 68 37 33 2 13
66 45
32 99 5 50 6 69 12 110 16 7 15 17 51 20 53 70 31 23 30 35
(2x)
Guidance Transfert Rod
65 111 58 57 59 4 113 14 60 112 26 29 54 43 1 3 8 18 21 25
Gleitmo 805 K
Mobil SHC 634
Contact Oel
PDP 65
Topas L30
Gleitmo 585 K
SM30 TF

MECHANICAL PARTS

1	4822 281 11051	DOUBLE
2	4822 404 21083	ANCHOR ON SUPPORT 33
3	4822 404 21084	ANCHOR IN HOLDER 8
5	4822 522 32868	WHEEL IDLER
6	4822 528 10776	CARRIER
7	4822 528 70658	ASSY
8	4822 404 21087	FOR ANCHOR 2
1	4822 492 70556	FOR ANCHOR 2
14	4822 361 30297	SERVO ASSY
16	4822 522 32869	NORMAL/REVERSE
17	4822 404 21089	DRIVING 16
20	4822 404 21086	ASSY SERVO GEARWHEEL
23	4822 528 81378	FLYWHEEL
26	4822 277 11215	ON/OFF
27	4822 492 70557	FOR PRES. ROLLER 45
29	4822 502 12548	FIX MOTOR 32
30	4822 358 31053	BELT, DRIVING
31	4822 528 81144	DIVERTING BELT
32	4822 361 30294	CAPSTAN
33	4822 404 21088	FOR HEAD,PRES.ROLLR
34	4822 249 30157	WITH FLEXPRINT
44	4822 466 82631	FOR CASSETTE
45	4822 528 81377	REVERSE
48	4822 404 21091	EJECT
49	4822 404 21092	HOLDING CASSETTE
50	4822 522 32871	COUPLING
59	4822 522 10435	ASSY
60	4822 277 11216	ME/CR
65	4822 532 52348	FOR CARRIER CLUTCH
68	4822 528 81449	NORMAL
69	4822 492 70926	UNDER CARRIER
70	4822 520 30539	FOR FLYWHEEL
111	4822 321 61954	CABLE, CONNECT
112	4822 256 92048	FOR PCB
113	4822 214 52077	PCB KOMPL.

ELECTRICAL PARTS

2207	5322 122 32654	22NF10%X7R 63V
2401	4822 124 22748	10UF 10V
2402	4822 122 33127	2,2NF10%X7R 63V
2403	4822 122 33178	1NF 20% X7R 50V
2404	4822 124 23279	22UF20% 16V
2405	5322 122 32654	22NF10%X7R 63V
2406	4822 124 41013	2,2UF 25V
2407	5322 122 32654	22NF10%X7R 63V
2411	4822 122 33177	10NF 20% X7R 50V
2413	4822 124 23279	22UF20% 16V
2414	5322 122 32654	22NF10%X7R 63V
3401	4822 051 20822	8K20 5% 0,1W
3402	4822 051 20102	1K00 5% 0,1W
3403	4822 051 20332	3K30 5% 0,1W
3404	4822 051 20472	4K70 5% 0,1W
3405	4822 116 40241	3K6 PTC
3406	4822 051 20123	12K00 5% 0,1W
3407	4822 051 20243	24K00 5% 0,1W
3408	4822 053 10399	39R00 5% 1W
3409	5322 101 11014	5K POTMETER
3410	4822 051 20153	15K00 5% 0,1W
3411	4822 051 20689	68R00 5% 0,1W
3412	4822 051 20183	18K00 5% 0,1W
5411	4822 050 21008	1R00 1% 0,6W
5412	4822 050 21008	1R00 1% 0,6W
7401	4822 209 32207	TDA3611
7411	4822 130 32911	BYV10-30
7412	4822 130 32911	BYV10-30

AIDS AND TOOLS

100	4822 390 10107	ISOFLEX PDP65
101	4822 390 20128	TOPAS L30
103	4822 390 10123	MOBIL OIL SHC 634
104	4822 390 20027	GLEITMO 805K
105	4822 390 20128	L30 TF
107	4822 390 20139	GLEITMO 585K

Printed by: Schaltungsdienst Lange, Berlin (GERMANY)

Service
Service
Service

VIDE-V16131

Service Manual

12 V

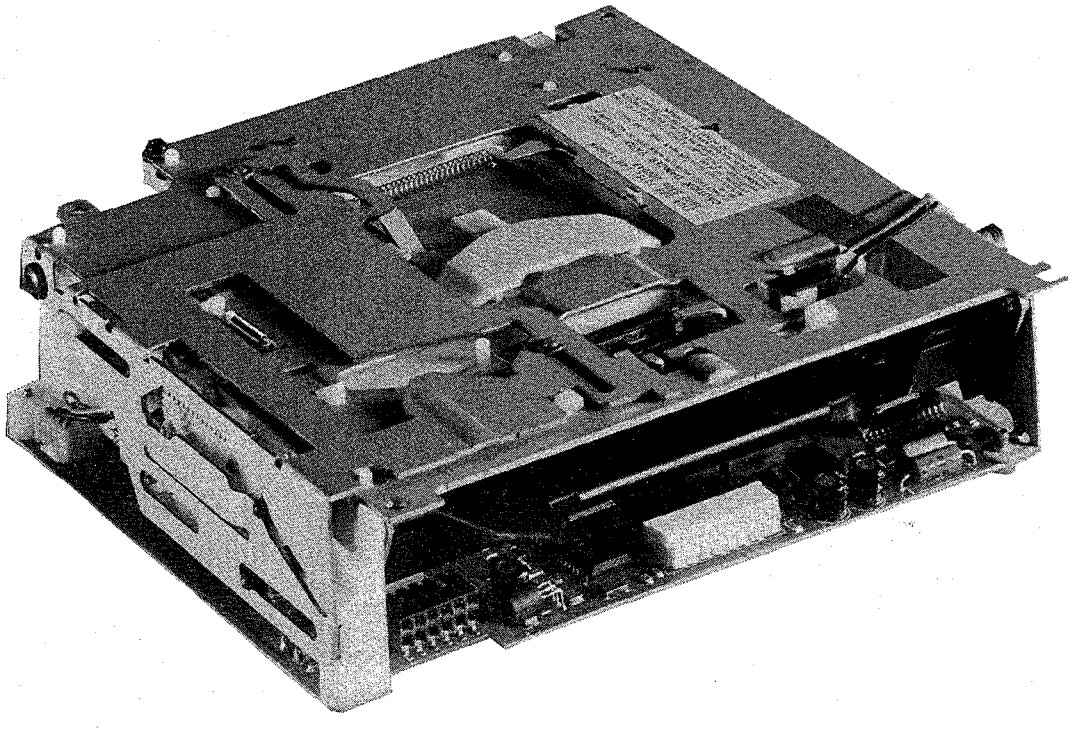

**CLASS 1
LASER PRODUCT**

Published by Philips Car Systems
© Copyright reserved Subject to modification
4822 725 23506

PCS 67 611

CONTENTS

Contents, Specification, Notes . . . . . page 2
Wiring diagram / Measurements . . . . . page 3
Oszillograms . . . . . page 4
Adaption of CDM-9 . . . . . page 5
Technician remarks . . . . . page 6
PCB - Layout . . . . . page 7
Measuring-point allocation . . . . . page 8
Decoder . . . . . page 9
DA-converter . . . . . page 10
Discmotor control / Loadingmotor control . . page 11
Power supply . . . . . page 12
Main control unit . . . . . page 13
Compression . . . . . page 14
Exploded view / Lubrication instructions . . page 15
Partslist . . . . . page 16

SPEZIFICATION

Operating voltage:	10 V - 16 V
Operating temperature:	15°C - +70°C
Accesstime:	max. 2sec (inner to outer track)
Load- / Eject- time:	max. 4sec
Mounting angle (see page 5):	-10° - +20° +30° - +60° (optional)
Playability:	
- Testdisc 5A (4822 397 30096):	wedges 900m (track 9, time 19'59) blackdots - 800µm (track 17, time 40'04) fingerprints (track 18 + 19, time 42'46 + 45'06)
- Scewdisc (4822 701 11922):	first 10min without interruptions
- Eccentricity disc (4822 701 11923):	first 10min without interruptions

NOTE: Switch off power supply before connect and disconnect CDM 9 - Module and set (danger of shortcircuit)!

NOTE: Use the coded plugs and sockets to build the needed extension cables.

NOTE: The chassis of CDM 9 is not grounded when separated from the set.

NOTE: Only PLAY but no LOAD and EJECT can be realized in upside-down position.

NOTE: Measurements are done in PLAY (P), STANDBY (S) and DISC OUT (O), DC → GND.

Wiring Diagram

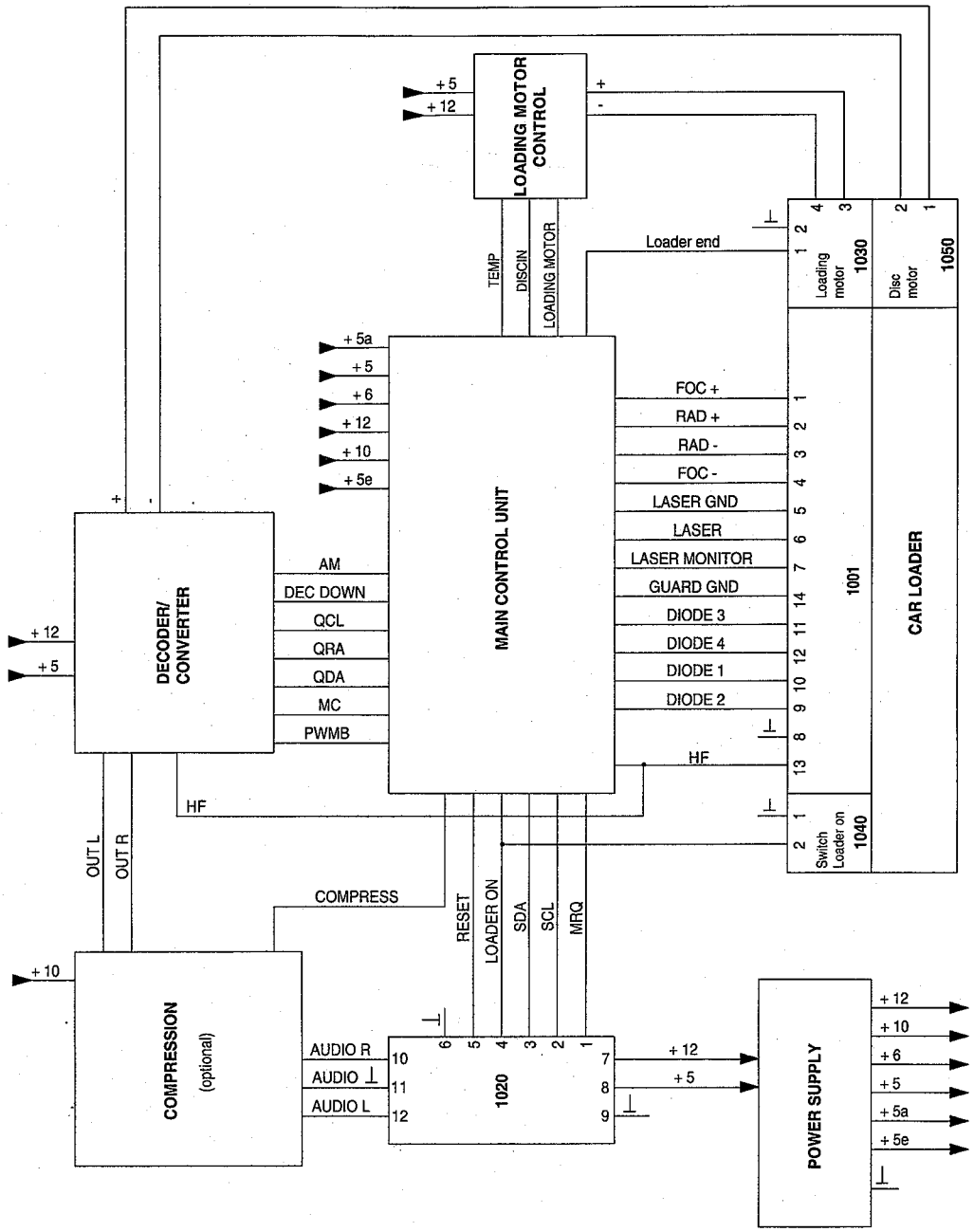

all values measured in PLAY (P), DC - GND

+ 5	= 5,0 V
+ 5a	= 4,7 V
+ 5e	= 5,0 V
+ 6	= 6,0 V
+10	= 8,4 V
+12	= 12,0 V
AUDIO-LEVEL (L+R)	= 0,0 V (1,2 V_{eff})
MRQ	= see oscillogram MRQ
SCL	= see oscillogram SCL
SDA	= see oscillogram SDA
LOADER ON	= 5,0 V
RESET	= 30 mV
COMPRESS	= HIGH when COMPRESS OFF, LOW when COMPRESS ON
HF	= 3,1 V (POS.1001, PIN 13)
QDA	= see oscillogram QDA
QRA	= see oscillogram QRA
QCL	= see oscillogram QCL
PWMB	= 5,0 V (intermittend data when focussing)
DEC. DOWN	= 0,0 V

AM	= 5,0 V
MC	= see oscillogram MC
TEMP	= 3,9 V (0,0 V if T ≥ 70°C)
DISC MOTOR +	= 5,4 V
DISC MOTOR -	= 4,8 V
LOADING MOTOR	= 3,4 V (5,0 V load, 0,0 V eject)
LOADING MOTOR +	= 3,7 V (0,9 V load, 6,3 V eject)
LOADING MOTOR -	= 3,7 V (6,3 V load, 0,9 V eject)
LOADER END	= 0,0 V (5,0 V CD OFF)
DISCIN	= 3,8 V (0,0 V during load)
FOC +	= 2,4 V
FOC -	= 2,6 V
RAD +	= see oscillogram RAD
RAD -	= see oscillogram RAD
LASER GND	= 0,0 V
LASER	= 2,0 V
LASER MONITOR	= 0,2 V
GUARD GND	= 0,0 V
DIODE 1	= 1,3 V
DIODE 2	= 1,3 V
DIODE 3	= 1,3 V
DIODE 4	= 1,3 V

MRQ

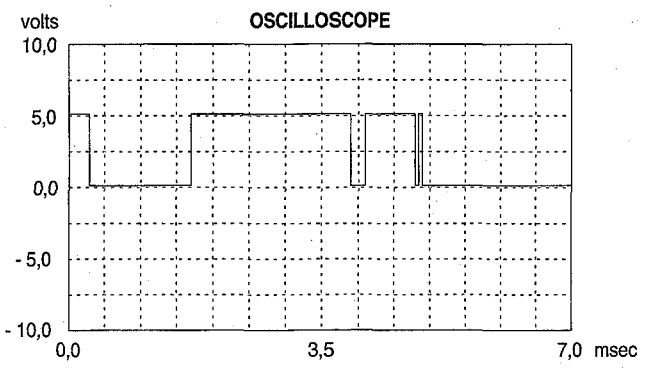

SCL

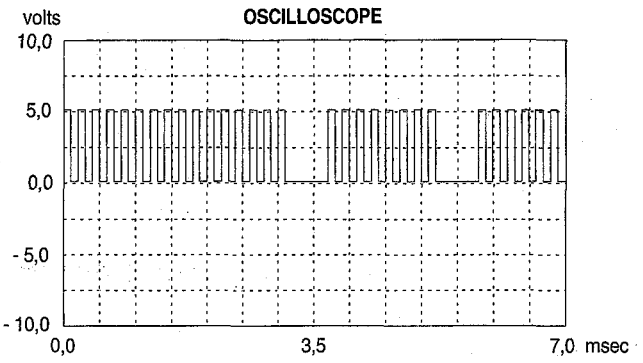

SDA

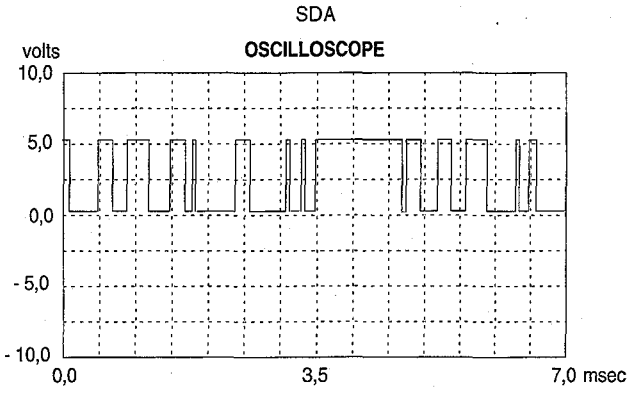

QDA

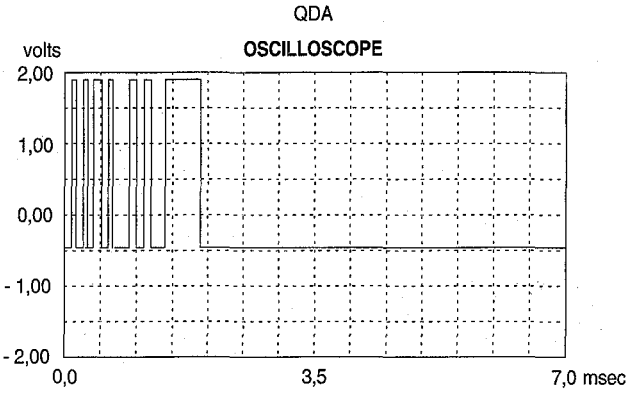

QRA

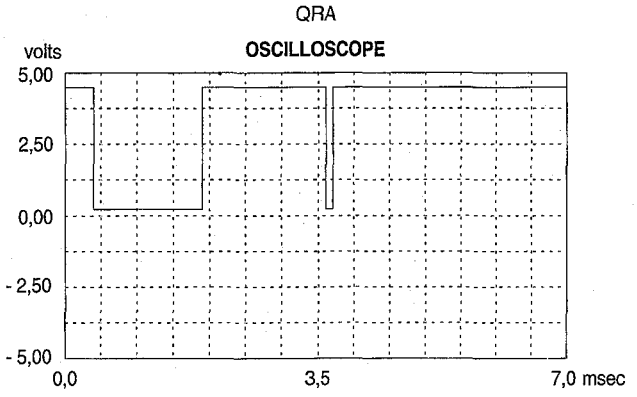

QCL

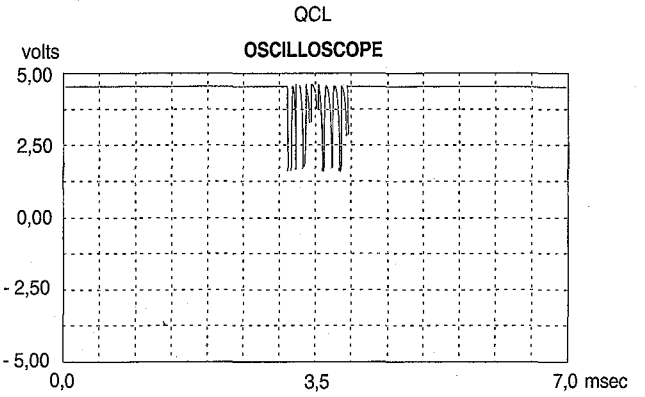

MC

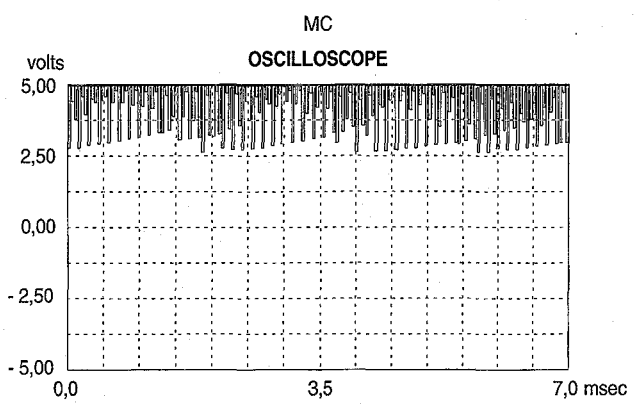

RAD

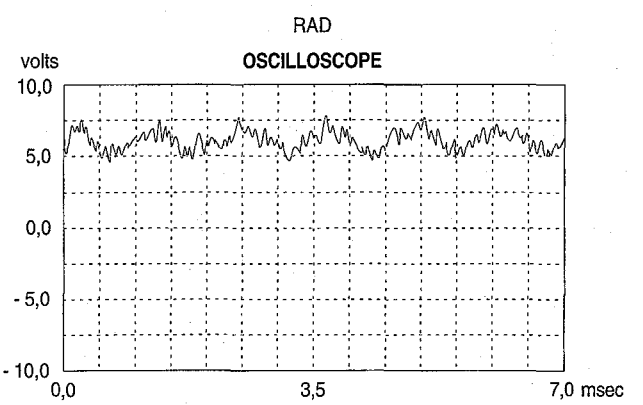

PCS 67 614

Adaptation of CDM 9 for playability at a mounting angle of 30° to 60°

Take the rear springs from the suspensions and put them in the additional fixation hooks as shown in the figure below (see also service-information A92 - 402).

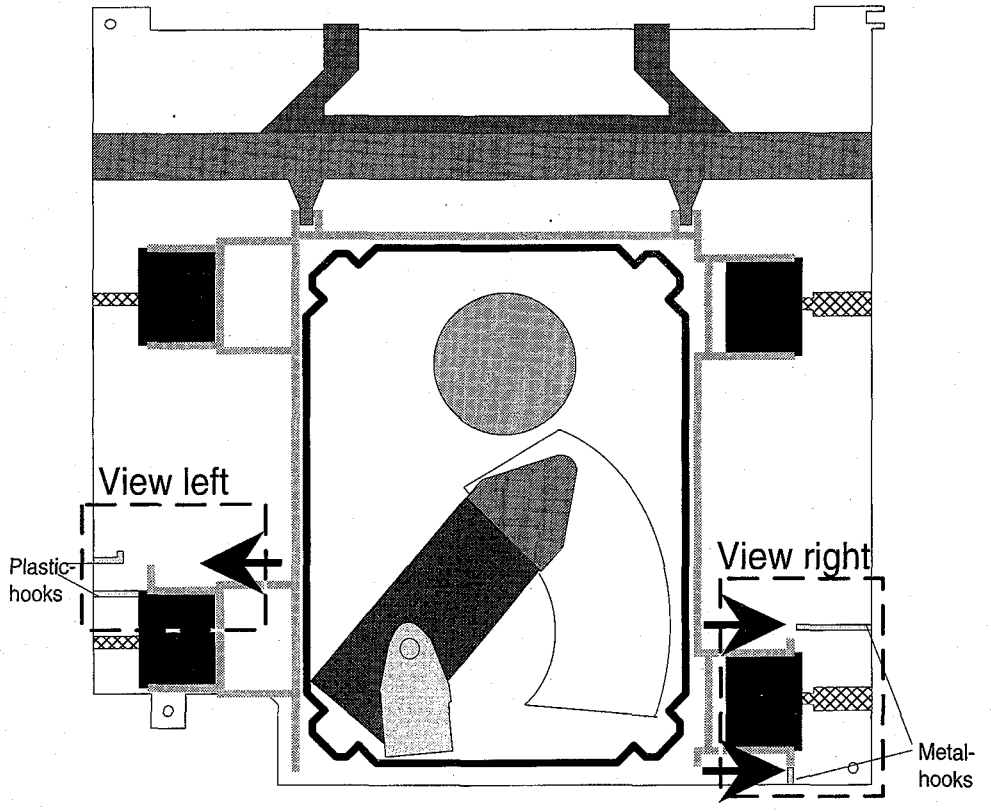

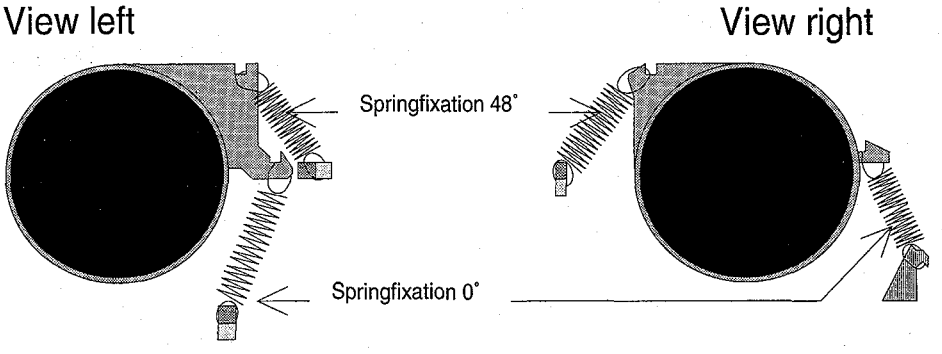

Technician remarks

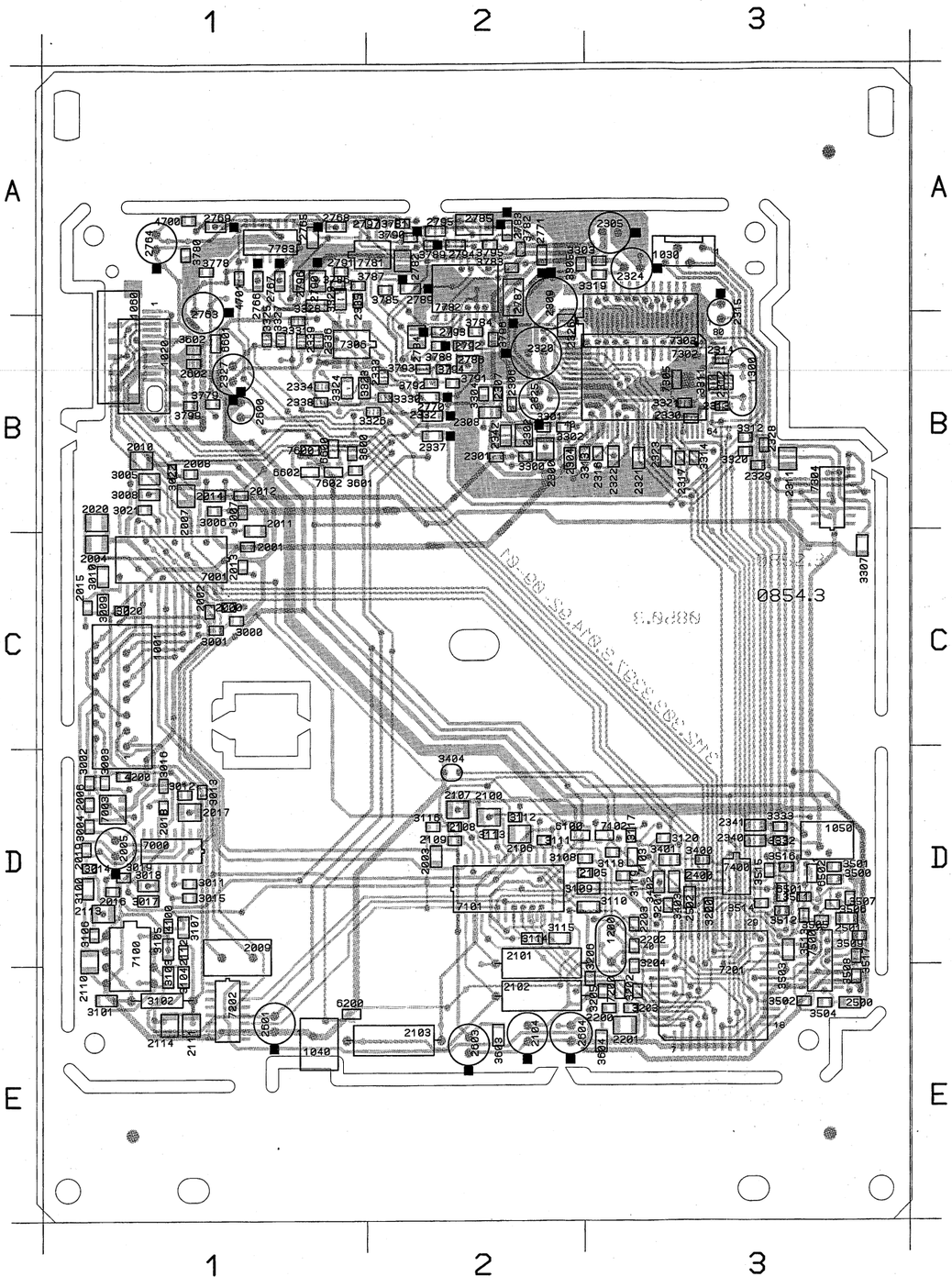

M100 B 2	M307 B 1	M475 D 3	2014 B 1	2767 A 1	3307 C 3	7000 D 1
M101 B 2	M308 E 2	M477 D 3	2015 C 1	2768 A 1	3311 B 3	7001 C 1
M102 B 2	M312 B 1	M478 D 1	2016 D 1	2769 A 1	3312 B 3	7003 D 1
M103 B 2	M401 C 1	M479 E 1	2017 D 1	2770 B 2	3313 B 2	7100 D 1
M104 A 3	M402 C 1	M480 E 1	2018 D 1	2771 A 2	3314 B 3	7101 D 2
M105 B 1	M403 C 1	M481 D 1	2019 D 1	2782 A 2	3319 A 3	7102 D 3
M106 B 2	M404 C 1	M482 E 1	2020 B 1	2783 A 2	3320 B 3	7103 D 3
M107 B 2	M405 C 1	M483 D 1	2100 D 2	2784 B 2	3321 B 3	7200 E 3
M108 B 2	M406 C 1	M484 E 1	2101 D 2	2785 A 2	3323 B 1	7201 E 3
M109 B 3	M407 C 1	M485 B 1	2102 E 2	2786 B 2	3324 B 1	7202 E 1
M110 B 3	M408 C 1	M486 E 3	2103 E 1	2787 A 2	3325 B 1	7302 B 3
M111 B 3	M409 C 1	M487 D 3	2104 E 2	2789 A 2	3326 B 2	7303 B 3
M112 B 3	M410 C 1	M488 D 3	2105 D 2	2790 A 1	3327 B 1	7304 B 3
M113 A 2	M411 D 1	M489 D 3	2106 D 2	2791 A 1	3328 A 1	7305 B 3
M114 B 3	M412 D 1	M490 D 3	2107 D 2	2792 B 2	3329 A 1	7306 B 1
M115 C 3	M413 C 1	M501 A 2	2108 D 2	2793 B 2	3330 B 2	7400 D 3
M116 C 3	M414 C 1	M502 A 2	2109 D 2	2794 A 2	3331 B 1	7500 D 3
M117 B 3	M415 C 1	M503 A 2	2110 D 1	2795 A 2	3332 D 3	7600 B 1
M118 B 3	M416 C 1	M505 A 2	2111 E 1	2796 A 1	3333 D 3	7602 B 1
M119 B 3	M417 C 1	M506 A 2	2112 D 1	2797 A 2	3400 D 3	7781 A 2
M120 B 3	M418 B 1	M507 A 2	2113 D 1	3000 C 1	3401 D 3	7782 A 2
M121 B 3	M419 C 1	M508 B 2	2114 E 1	3001 C 1	3402 D 3	7783 A 1
M122 B 3	M420 C 1	M509 A 2	2200 E 3	3002 D 1	3403 D 3	
M123 B 2	M421 C 1	M510 B 2	2201 E 3	3003 D 1	3404 D 2	
M124 B 3	M422 C 1	M511 B 2	2202 D 3	3004 D 1	3500 D 3	
M125 B 3	M423 B 1	M512 B 2	2203 D 3	3005 B 1	3501 D 3	
M126 B 3	M424 B 1	M513 B 2	2300 B 2	3006 B 1	3502 E 3	
M127 B 3	M425 C 1	M514 A 2	2301 B 2	3007 B 1	3503 D 3	
M128 C 3	M426 B 1	M515 A 2	2302 B 2	3008 B 1	3504 E 3	
M129 C 3	M427 C 1	M516 A 1	2304 B 2	3009 C 1	3505 D 3	
M130 B 3	M428 C 1	M517 A 2	2305 A 3	3010 C 1	3506 D 3	
M131 B 2	M429 B 1	M518 A 2	2306 B 2	3011 D 1	3507 D 3	
M132 B 3	M430 B 1	M519 A 2	2307 B 2	3012 D 1	3508 E 3	
M133 B 2	M431 B 1	M520 A 2	2308 B 2	3013 D 1	3509 D 3	
M134 B 3	M432 D 1	M521 A 2	2309 A 2	3014 D 1	3511 D 3	
M135 A 3	M433 D 1	M522 A 2	2311 B 3	3015 D 1	3512 D 3	
M136 B 2	M434 D 1	M523 B 2	2312 B 3	3016 D 1	3513 D 3	
M137 B 1	M435 D 1	M524 A 2	2313 B 3	3017 D 1	3514 D 3	
M138 B 2	M436 C 1	M525 B 2	2314 B 3	3018 D 1	3515 D 3	
M139 B 1	M437 D 1	M526 B 2	2315 B 3	3019 D 1	3516 D 3	
M140 A 1	M438 D 1	M527 A 1	2316 B 3	3020 C 1	3517 D 3	
M141 B 1	M439 D 1	M528 A 1	2317 B 3	3021 B 1	3600 B 1	
M142 B 1	M440 D 1	M529 A 1	2320 B 2	3022 B 1	3601 B 1	
M143 A 1	M441 C 1	M530 A 1	2321 B 3	3100 D 1	3602 B 1	
M144 A 1	M442 D 2	M531 A 1	2322 B 3	3101 E 1	3603 E 2	
M145 B 1	M443 D 2	M532 B 2	2323 B 3	3102 E 1	3604 E 3	
M146 B 2	M444 D 2	M533 A 1	2324 A 3	3103 E 1	3778 A 1	
M147 B 3	M445 D 2	M534 A 1	2325 B 2	3104 E 1	3779 B 1	
M148 D 3	M446 D 2	M535 A 1	2326 B 2	3105 D 1	3780 A 1	
M149 D 3	M447 D 2	M536 B 1	2327 B 1	3106 D 1	3781 A 2	
M200 D 3	M448 D 2	M537 B 1	2328 B 3	3107 D 1	3782 A 2	
M201 D 3	M449 E 3	M544 A 1	2329 B 3	3108 D 2	3783 A 2	
M202 D 3	M450 D 2	M545 A 1	2330 B 3	3109 D 3	3784 B 2	
M203 D 3	M451 D 2	M547 A 1	2332 B 2	3110 D 3	3785 A 2	
M204 D 3	M452 D 2	M549 A 1	2333 B 2	3111 D 2	3786 A 1	
M205 D 3	M453 D 1	1001 C 1	2334 B 1	3112 D 2	3787 A 1	
M206 D 3	M454 E 2	1020 B 1	2335 A 1	3113 D 2	3788 B 2	
M207 D 3	M455 D 2	1030 A 3	2336 B 1	3114 D 2	3789 A 2	
M208 D 3	M456 D 2	1040 E 1	2337 B 2	3115 D 2	3790 A 2	
M209 E 3	M457 D 2	1050 D 3	2338 B 1	3116 D 2	3791 B 2	
M210 E 3	M458 D 1	1060 A 1	2339 B 1	3117 D 3	3792 B 2	
M211 D 3	M459 E 1	1200 D 3	2340 D 3	3118 D 3	3793 B 2	
M212 D 3	M460 D 2	1300 B 3	2341 D 3	3119 D 3	3794 B 2	
M213 D 3	M461 D 2	2000 C 1	2342 B 2	3120 D 3	3795 A 2	
M214 D 3	M462 D 2	2001 C 1	2400 D 3	3200 D 3	3796 B 2	
M215 D 3	M463 E 3	2002 C 1	2500 E 3	3201 D 3	3799 B 1	
M216 D 3	M464 D 1	2003 D 2	2501 D 3	3202 E 3	4100 D 1	
M217 D 3	M465 B 1	2004 C 1	2502 D 3	3203 E 3	4200 D 1	
M218 D 3	M466 B 1	2005 D 1	2600 B 1	3204 E 3	4700 A 1	
M219 D 3	M467 B 1	2006 D 1	2601 E 1	3205 E 3	4701 A 1	
M220 D 3	M468 E 2	2007 B 1	2602 B 1	3206 E 3	6100 D 2	
M300 B 1	M469 D 3	2008 B 1	2603 E 2	3300 B 2	6200 E 1	
M302 B 1	M470 B 1	2009 D 1	2604 E 2	3301 B 2	6501 D 3	
M303 B 2	M471 B 1	2010 B 1	2763 A 1	3302 B 2	6502 D 3	
M304 B 1	M472 E 2	2011 B 1	2764 A 1	3303 A 3	6600 B 1	
M305 C 2	M473 E 3	2012 B 1	2765 A 1	3304 B 2	6601 B 1	
M306 B 1	M474 D 3	2013 C 1	2766 A 1	3305 A 2	6602 B 1	

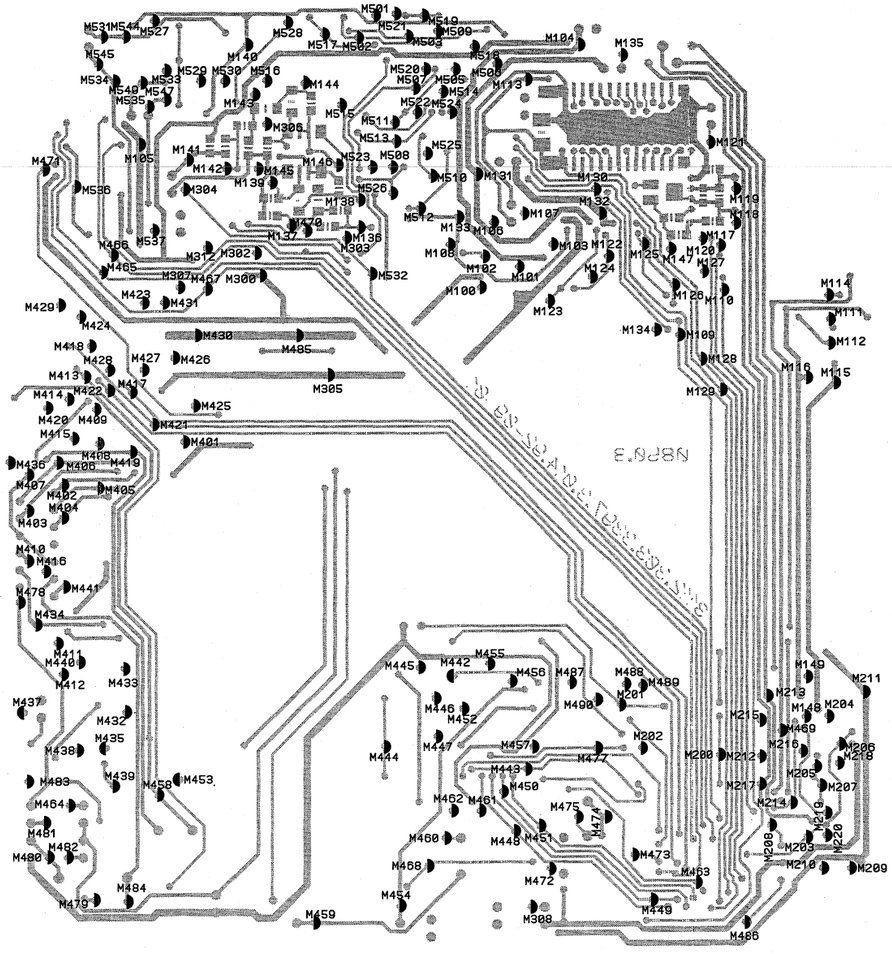
M501
M531
M544
M527
M528
M519
M521
M509
M517
M502
M503
M104
M135
M545
M140
M534
M529
M530
M516
M144
M520
M507
M505
M508
M113
M549
M547
M533
M535
M143
M515
M522
M524
M511
M306
M513
M120
M525
M471
M105
M141
M142
M145
M146
M523
M508
M139
M304
M526
M510
M131
M130
M119
M536
M138
M512
M107
M132
M118
M153
M106
M117
M486
M537
M137
M136
M303
M108
M103
M122
M125
M120
M147
M127
M312
M302
M465
M307
M467
M300
M532
M102
M101
M124
M126
M110
M114
M423
M431
M100
M123
M429
M424
M430
M485
M134
M109
M111
M418
M428
M427
M426
M305
M128
M112
M116
M115
M413
M417
M422
M129
M414
M425
M420
M409
M421
M415
M401
M408
M436
M406
M419
M407
M405
M422
M404
M403
M410
M416
M478
M441
M434
M411
M440
M412
M433
M437
M432
M435
M438
M439
M458
M453
M483
M454
M481
M482
M480
M484
M476
M459
M445
M442
M455
M456
M487
M488
M489
M201
M213
M149
M211
M446
M452
M490
M215
M148
M204
M469
M216
M202
M206
M444
M447
M457
M477
M280
M212
M218
M443
M205
M462
M461
M450
M217
M207
M475
M474
M214
M219
M220
M460
M448
M451
M208
M203
M473
M468
M210
M209
M463
M472
M454
M449
M308
M486

POS. 7302 SAA 7341

	1 - 22: DATA
M128	23: see QRA (P) / 40 mV (S,O)
M129	24: see QDA (P) / 0,0 V (S,O)
M130	25: see QCL (P) / 5,0 V (S,O)
	26: nc
M113	27: 5,0 V (P,S,O)
M109	28: see MC (P) / 0,0 V (S,O)
M110	29: 5,0 V (P,S,O)
	30 - 32: nc
	33: GND
	34: nc
	35: GND
M107	36: 2,8 V (P) / 130 mV (S,S-O) / 5,0 V (P-O)
M107	37: 2,8 V (P) / 130 mV (S,S-O) / 5,0 V (P-O)
M101	38: 2,5 V (P,S,O)
M106	39: 2,5 V (P,S,O)
M102	40: 2,5 V (P,S,O)
M104	41: 5,0 V (P,S,O)
M103	42: 2,2 V (P,S,O)
M133	43: 2,2 V (P,S,O)
	44 - 45: nc
M131	46: 4,4 V (P,S,O)
M123	47: 2,2 V (P) / 2,3 V (S,O)
	48: GND
M122	49: AF (P) / 0,0 V (S,O)
	50: GND
M132	51: 2,2 V (P,S,O)
M132	52: 2,2 V (P,S,O)
	53: GND
M125	54: AF (P) / 0,0 V (S,O)
	55: GND
M126	56: 2,2 V (P) / 2,3 V (S,O)
M131	57: 4,4 V (P,S,O)
	58 - 59: nc
M134	60: 2,2 V (P,S,O)
	61 - 64: nc
M121	65: 5,0 V (P,S,O)
	66 - 69: nc
M120	70: DEC.DOWN
M118	71: 2,2 V (P) / 5,0 V (S,O)
M119	72: 2,3 V (P) / 0,0 V (S,O)
	73: GND
	74 - 78: nc
M113	79: 5,0 V (P,S,O)
M117	80: 5,0 V (P,S,O)

POS. 7303 HY 6264 ALJ-10

	1: GND
	2 - 13: DATA
	14: GND
	15 - 19: DATA
	20: GND
	21: DATA
	22: GND
	23 - 25: DATA
	26: 5,0 V (P,S,O)
	27: DATA
	28: 5,0 V (P,S,O)

POS. 7304 L 272D

	1: nc
	2: nc
M115	3: 4,2 V (P) / 5,0 V (S,O)
M114	4: 12,0 V (P,S,O)
M116	5: 5,0 V (P,S,O)
	6: GND
	7: nc
	8: nc
	9: nc
	10: nc
M116	11: 5,0 V (P,S,O)
M112	12: 5,0 V (P,S,O)
M111	13: 4,2 V (P) / 5,0 V (S,O)
M115	14: 4,2 V (P) / 5,0 V (S,O)
	15: nc
	16: nc

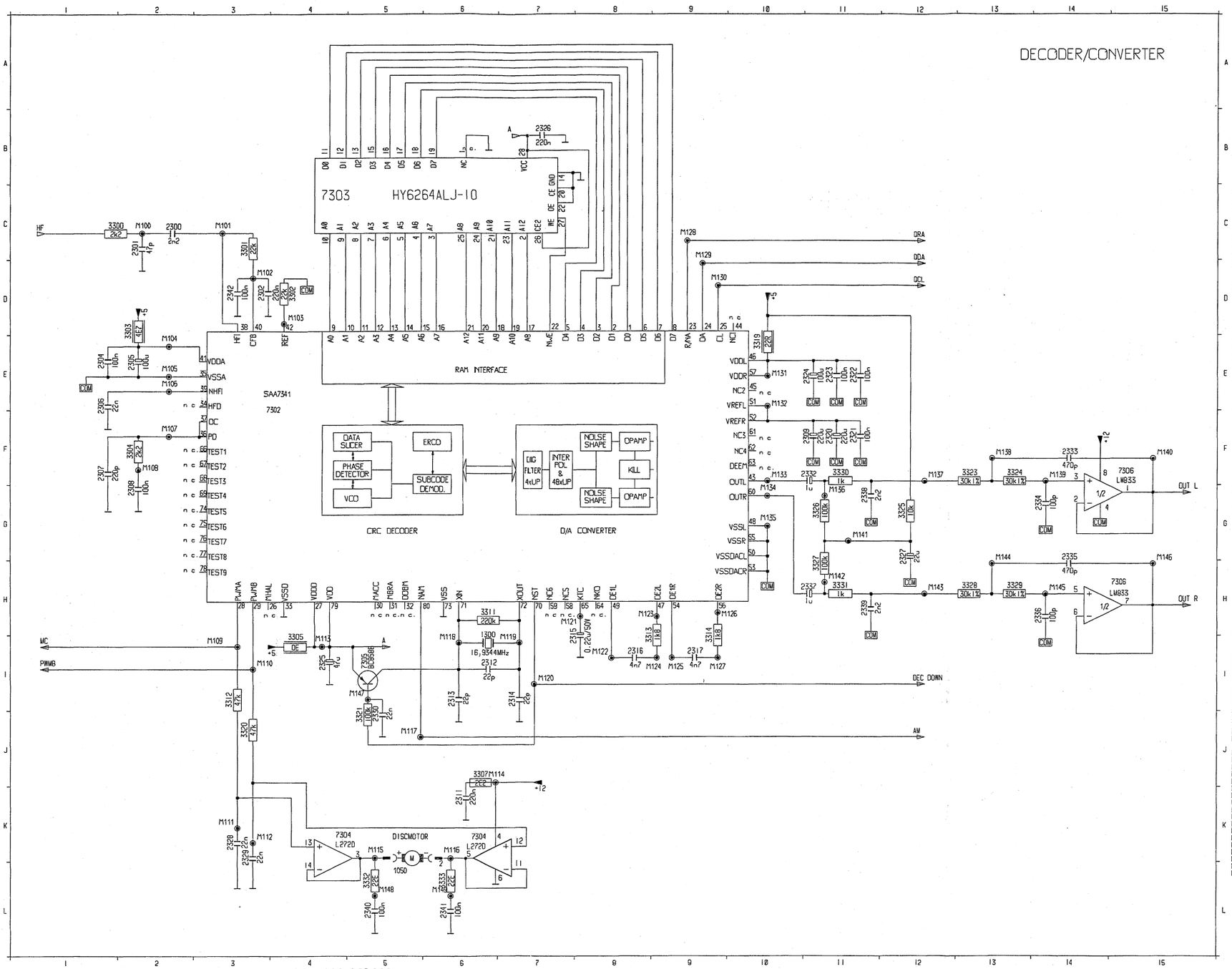

POS. 7305 BC 858

M147	B: 5,0 V (P) / 4,4 V (S,O)
M118	C: 2,2 V (P) / 5,0 V (S;O)
M113	E: 5,0 V (P,S,O)

POS. 7306 LM 833

M140	1: AF 5,0 V (P) / 5,0 V (S,O)
M140	2: AF 5,0 V (P) / 5,0 V (S,O)
M139	3: AF 5,0 V (P) / 5,0 V (S,O)
	4: GND
M145	5: AF 5,0 V (P) / 5,0 V (S,O)
M146	6: AF 5,0 V (P) / 5,0 V (S,O)
M146	7: AF 5,0 V (P) / 5,0 V (S,O)
	8: 12,0 V

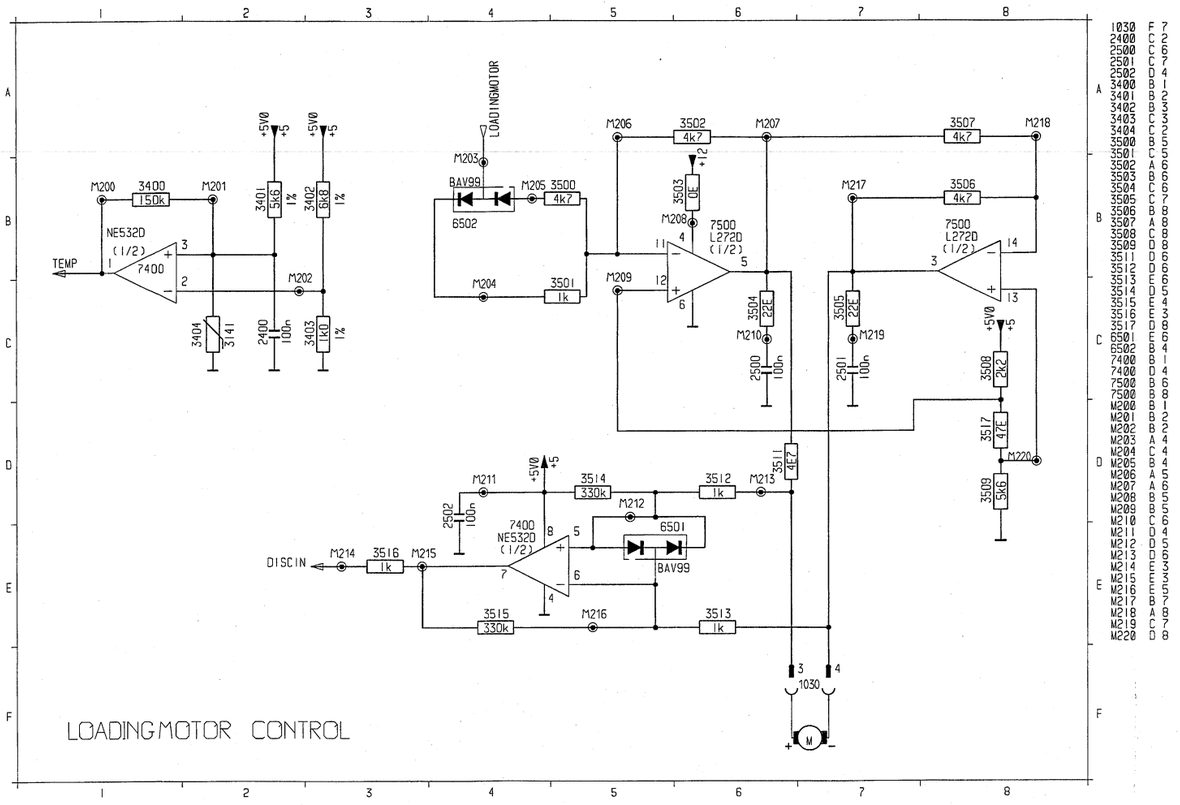

POS. 6501 BAV 99

M212	1: 3,6 V (P,S,O)
M212	2: 3,6 V (P,S,O)
M216	3: 3,5 V (P,S,O)

POS. 6502 BAV 99

M204	1: 3;6 V (P,S,O) / 4,2 V (LOAD)
M205	2: 3,6 V (P,S,O) / 1,0 V (EJECT)
M203	3: 3,4 V (P,S,O) / 5,0 V (LOAD) / 0,0 V (EJECT)

POS. 7400 NE 532D

M200	1: 3,9 V (P,S,O) / 0,0 V (T 70$C)
M202	2: 0,6 V (P,S,O)
M201	3: 2,3 V (P,S,O)
	4: GND
M212	5: 3,6 V (P,S,O)
M216	6: 3,5 V (P,S,O)
M215	7: 3,8 V (P,S,O) / 0,0 V (LOAD)
M211	8: 5,0 V (P,S,O)

POS. 7500 L 272D

	1: nc
	2: nc
M217	3: 3,5 V (P,S,O) / 6,5 V (LOAD) / 0,5 V (EJECT)
M208	4: 12,0 V (P,S,O)
M207	5: 3,5 V (P,S,O) / 0,5 V (LOAD) / 6,5 V (EJECT)
	6: GND
	7: nc
	8: nc
	9: nc
	10: nc
M206	11: 3,6 V (P,S,O)
M209	12: 3,6 V (P,S,O)
M220	13: 3,6 V (P,S,O)
M218	14: 3,6 V (P,S,O)
	15: nc
	16: nc

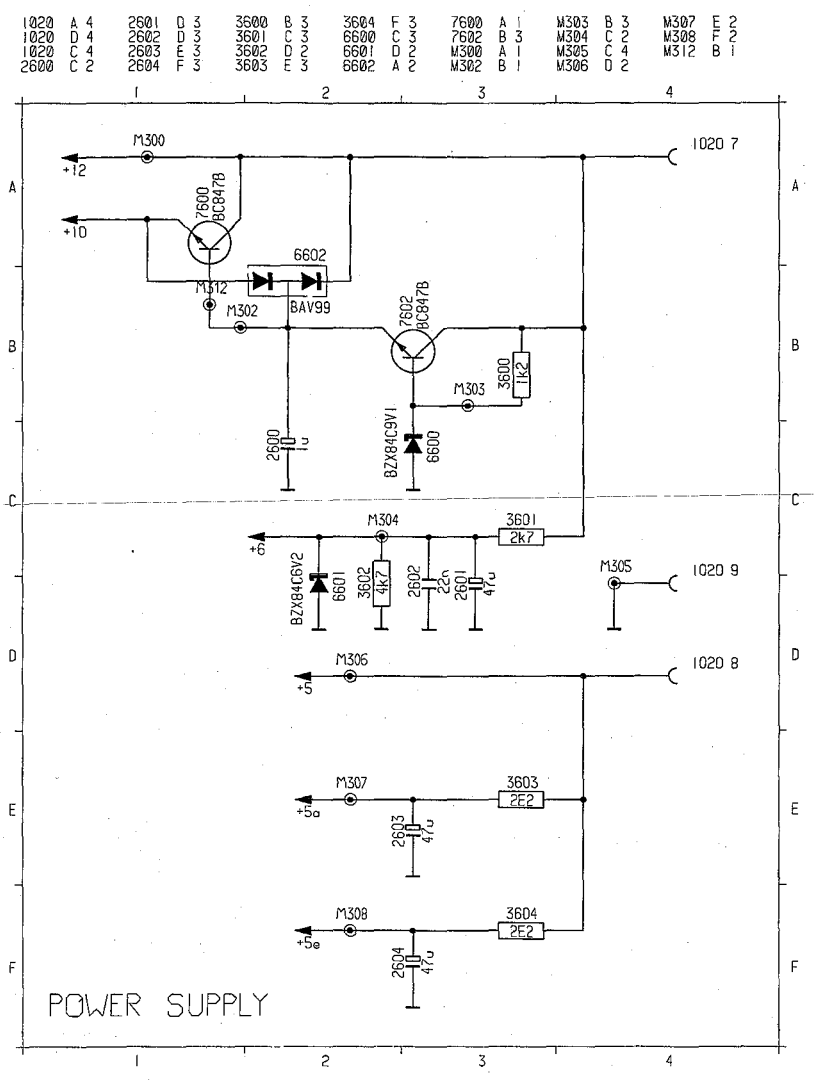

POS. 6602 BAV 99

M300	1: 12,0 V (P,S,O)
	2: 8,4 V (P,S,O)
M302	3: 9,0 V (P,S,O)

POS. 7600 BC 847B

M302	B: 9,0 V (P,S,O)
M300	C: 12,0 V (P,S,O)
	E: 8,4 V (P,S,O)

POS. 7602 BC 847B

M303	B: 9,5 V (P,S,O)
M300	C: 12,0 V (P,S,O)
M302	E: 9,0 V (P,S,O)

POS. 7000 L 272D

	1: nc
	2: nc
M434	3: 2,6 V (P) / 2,4 V (S,O)
M437	4: 12,0 V (P,S,O)
M441	5: 2,4 V (P) / 2,6 V (S,O)
	6: GND
	7: nc
	8: nc
	9: nc
	10: nc
M438	11: 2,5 V (P,S,O)
M439	12: 2,5 V (P,S,O)
M435	13: 2,5 V (P,S,O)
M432	14: 2,5 V (P,S,O)
	15: nc
	16: nc

POS. 7001 TDA 8808T/C3

M426	1: 2,5 V (P) / 0,4 V (S,O)
	2: 4,7 V (P) / 5,0 V (S,O)
M427	3: 2,0 V (P) / 2,5 V (S,O)
M423	4: 2,2 V (P,S,O)
	5: not const. (P) / 0 V (S,O)
M417	6: 2,8 V (P) / 0,0 V (S,O)
M428	7: 0,6 V (P,S,O)
M424	8: 1,3 V (P,S,O)
M418	9: 0,0 V (P,S,O)
M422	10: 4,6 V (P) / 70 mV (S,O)
M413	11: 4,7 V (P) / 5,0 V (S,O)
M421	12: 5,0 V (P) / 0,0 V (S,O)
	13: GND
M429	14: 2,8 V (P) / 3,8 V (S,O)
M420	15: 2,5 V (P,S,O)
M419	16: 2,5 V (P,S,O)
M416	17: 3,4 V (P) / 0 V (S,O)
M415	18: 0,2 V (P) / 0,0 V (S,O)
M414	19: 1,7 V (P) / 4,2 V (S,O)
M409	20: 2,9 V (P) / 3,7 V (S,O)
M408	21: 2,9 V (P) / 3,7 V (S,O)
M404	22: 1,3 V (P) / 0,0 V (S,O)
M403	23: 1,3 V (P) / 0,0 V (S,O)
M405	24: 1,3 V (P) / 0,0 V (S,O)
M406	25: 1,3 V (P) / 0,0 V (S,O)
	26: 1,4 V (P,S,O)
	27: GND
M425	28: 3,2 V (P) / 3,6 V (S,O)

POS. 7003 BC 868

M412	B: 3,5 V (P) / 0 V (S,O)
	C: 3,8 V (P) / 4,7 V (S,O)
M411	E: 2,8 V (P) / 0 V (S,O)

POS. 7100 TCA 0372DP1

M478	1: 6,0 V (P,S,O)
M481	2: 12,0 V (P,S,O)
M480	3: 6,0 V (P,S,O)
	4: GND
M482	5: 6,0 V (P,S,O)
	6: 6,0 V (P,S,O)
	7: 6,0 V (P,S,O)
M464	8: 6,0 V (P,S,O)

POS. 7101 TDA 8809T/C2

	1: 4,7 V (P) / 5,0 V (S,O)
M459	2: sinus 2,5 V (P,S,O)
M460	3: sinus 2,5 V (P,S,O)
M462	4: 0,1 V (P,S,O)
M461	5: 1,3 V (P,S,O)
M444	6: 4,5 V (P,S,O)
M443	7: 2,3 V (P) / 5,0 V (S,O)
M448	8: 0,0 V (P,S,O)
M449	9: 5,0 V (P) / 0,0 V (S,O)
M450	10: 5,0 V (P,S,O)
M451	11: 5,0 V (P,S,O)
	12: 8,4 V (P,S,O)
	13: GND
	14: GND
M453	15: 6,0 V (P,S,O)
M454	16: 2,5 V (P,S,O)
M456	17: 2,5 V (P,S,O)
M455	18: 2,5 V (P,S,O)
M457	19: 2,5 V (P,S,O)
M458	20: 2,5 V (P,S,O)
M442	21: not const. 1,8...2,1 V (P) / 3,7 V (S,O)
M452	22: 1,2 V (P,S,O)
M445	23: not const. (P) / 0,6 V (S,O)
M445	24: not const. (P) / 0,6 V (S,O)
M446	25: 2,6 V (P) / 5,0 V (S,O)
M447	26: 2,0 V (P) / 4,3 V (S,O)
M409	27: 2,9 V (P) / 3,7 V (S,O)
M408	28: 2,9 V (P) / 3,7 V (S,O)

POS. 7102 BC 847B

M487	B: 1,8 V (P) / 3,5 V (S,O)
M488	C: 4,3 V (P) / 3,0 V (S,O)
M490	E: 3,0 V (P,S,O)

POS. 7103 BC 858B

M489	B: 4,3 V (P,S,O)
M486	C: 0,0 V (P) / 5,0 V (S,O)
	E: 5,0 V (P,S,O)

POS. 7200 BC 847B

M472	B: 20 mV (P,S,O)
M473	C: 5,0 V (P,S,O)
	E: GND

POS. 7201 MC 68HC05C8

M473	1: 5,0 V (P,S,O)
M465	2: see MRQ (P) / 5,0 V (S,O)
	3: nc
	4: 5,0 V (P,S,O)
M465	5: see MRQ (P) / 5,0 V (S,O)
M417	6: 2,8 V (P) / 0,0 V (S,O)
M110	7: 5,0 V (P,S,O)
M448	8: 0,0 V (P,S,O)
M449	9: 5,0 V (P) / 0,0 V (S,O)
M450	10: 5,0 V (P,S,O)
M451	11: 5,0 V (P,S,O)
M463	12: 2,3 V (P,S,O)
M128	13: see QRA (P) / 40 mV (S,O)
M130	14: see QCL (P) / 5,0 V (S,O)
M129	15: see QDA (P) / 0,0 V (S,O)
M422	16: 3,9 V (P) / 70 mV (S,O)
M117	17: 5,0 V (P,S,O)
	18: nc
	19: nc
	20: nc
M486	21: 0,0 V (P) / 5,0 V (S,O)
	22: GND
	23: nc
M203	24: 3,4 V (P,S,O)
M444	25: 4,5 V (P,S,O)
M421	26: 5,0 V (P) / 0,0 V (S,O)
	27: nc
M532	28: 5,0 V (COMPRESS OFF) / 0,0 V (COMPRESS ON)
M120	29: 0,0 V (P) / 5,0 V (S,O)
M467	30: see SDA (P) / 5,0 V (S,O)
M466	31: see SCL (P) / 5,0 V (S,O)
M200	32: 3,9 V (P,S,O)
M214	33: 3,8 V (P,S,O) / 0,0 V (LOAD)
M109	34: see MC (P) / 70 mV (S,O)
M469	35: 0,0 V (P,S) / 5,0 V (O)
M468	36: 5,0 V (P,S,O)
M443	37: 2,3 V (P) / 5,0 V (S,O)
	38: nc
M477	39: 4,7 V (P) / 5,0 V (S,O)
	40: nc
M477	41: 4,7 V (P) / 5,0 V (S,O)
M474	42: 2,7 V (P,S,O)
M475	43: 2,4 V (P,S,O)
	44: 5,0 V (P,S,O)

PCS 67 622 Printed by: Schaltungsdienst Lange, Berlin (GERMANY)

MAIN CONTROL UNIT

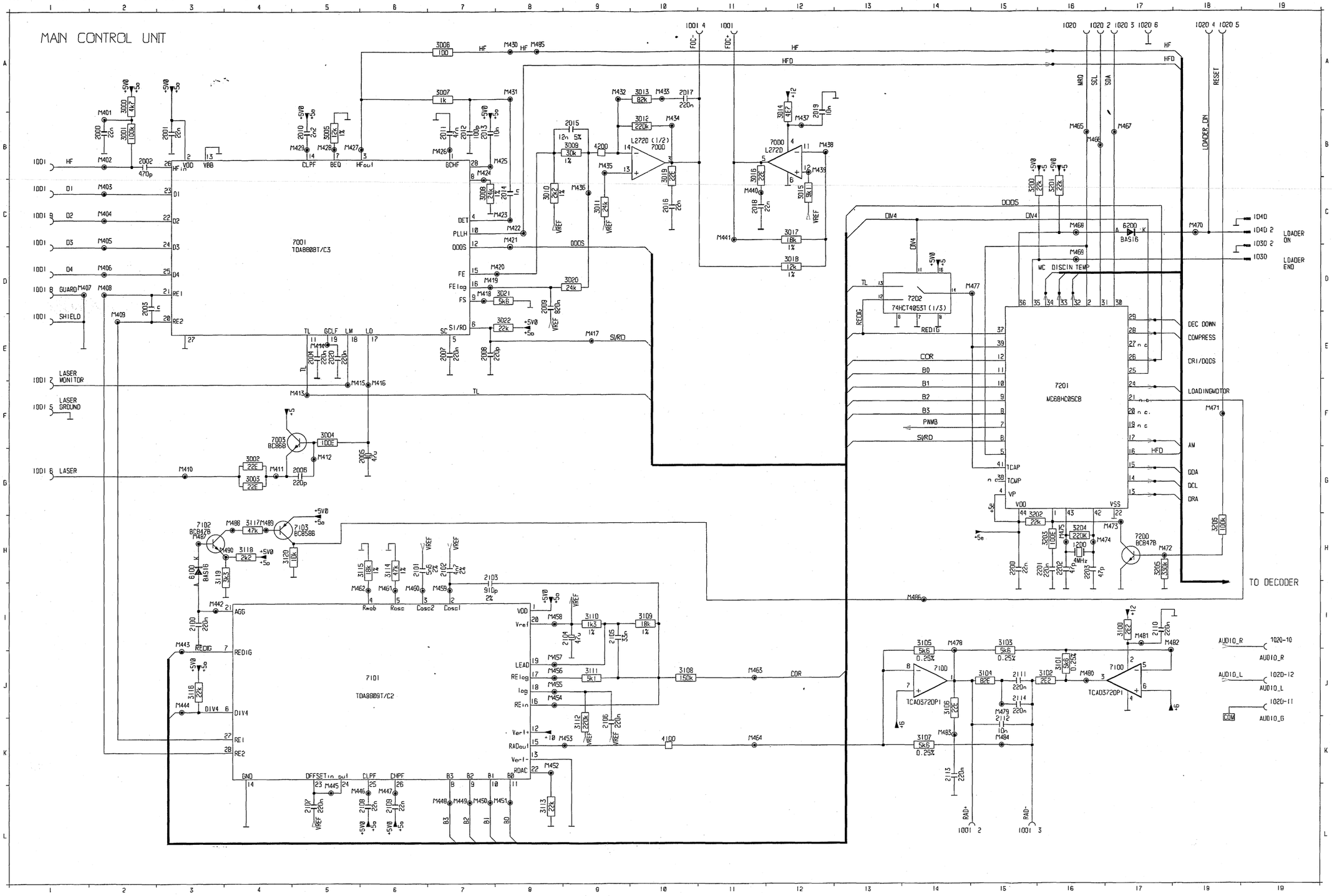

| | | |

POS. 7781 LM 833

M526	1: 2,5 V (P,S,O)
M513	2: 2,5 V (P,S,O)
M515	3: 2,5 V (P,S,O)
	4: GND
M503	5: 2,5 V (P,S,O)
M502	6: 2,5 V (P,S,O)
M517	7: 2,5 V (P,S,O)
	8: 8,0 V (P,S,O)

POS. 7782 SA 572D

	1: nc
M511	2: AF 1,5 V (P) / 1,1 V (S,O)
M522	3: 2,5 V (P,S,O)
M510	4: AF 1,5 V (P) / 1,1 V (S,O)
M513	5: 2,5 V (P,S,O)
M514	6: 2,5 V (P,S,O)
M524	7: 2,5 V (P,S,O)
	8: GND
M518	9: 2,5 V (P,S,O)
M505	10: 2,5 V (P,S,O)
M502	11: 2,5 V (P,S,O)
M507	12: AF 1,5 V (P) / 1,1 V (S,O)
M520	13: 2,5 V
M509	14: AF 1,5 V (P) / 1,1 V (S,O)
	15: nc
	16: 8,0 V (P,S,O)

POS. 7783 TK 15021M

	1: 8,0 V (P,S,O)
M528	2: 4,0 V (P,S,O)
	3: nc
M531	4: 4,0 V (P,S,O)
	5: nc
M527	6: 4,0 V (P,S,O)
M532	7: 5,0 V (COMPRESS OFF) / 0,0 V (COMPRESS ON)
M532	8: 5,0 V (COMPRESS OFF) / 0,0 V (COMPRESS ON)
M529	9: 4,0 V (P,S,O)
	10: nc
M549	11: 4,0 V (P,S,O)
	12: nc
M530	13: 4,0 V (P,S,O)
	14: GND

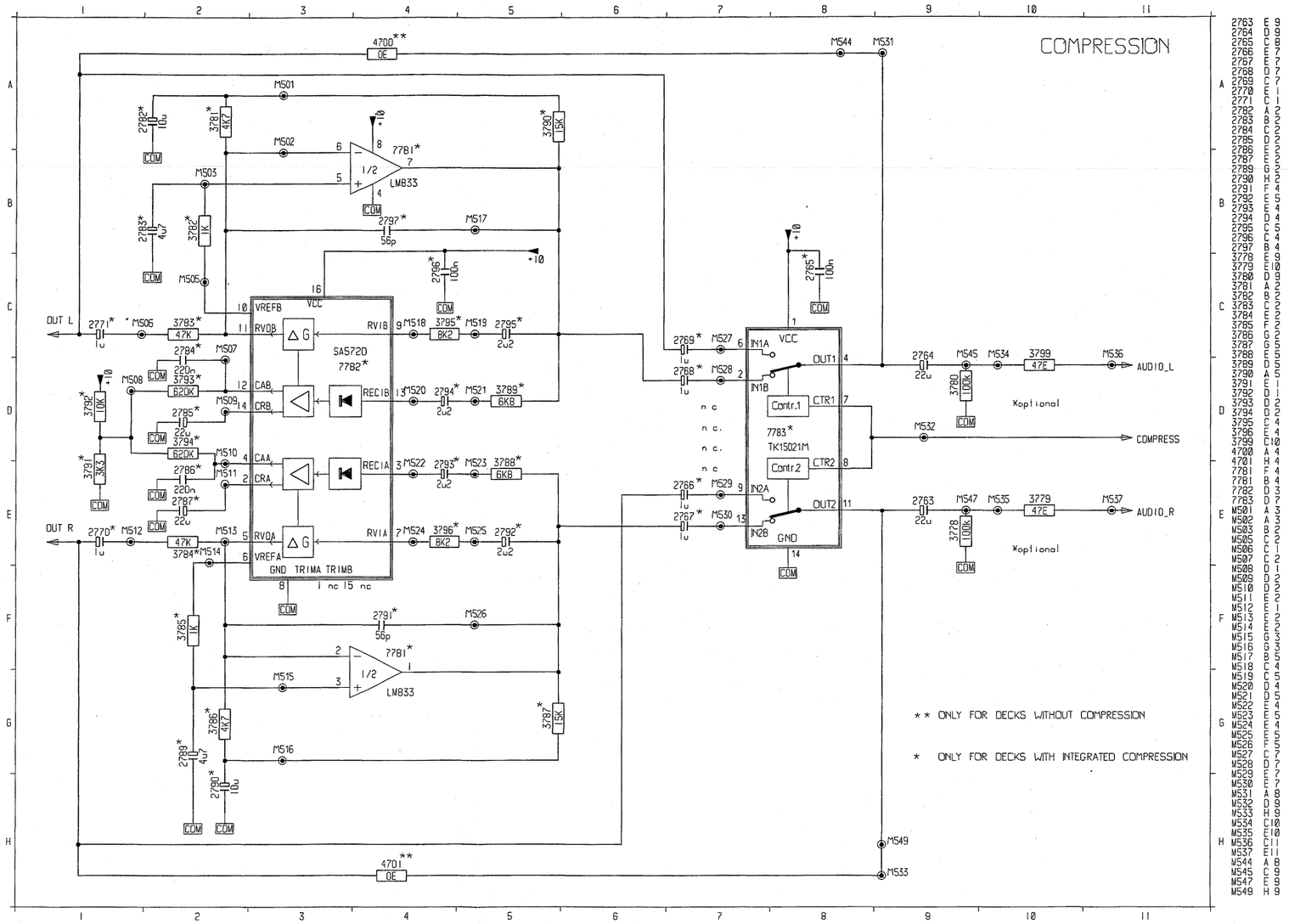

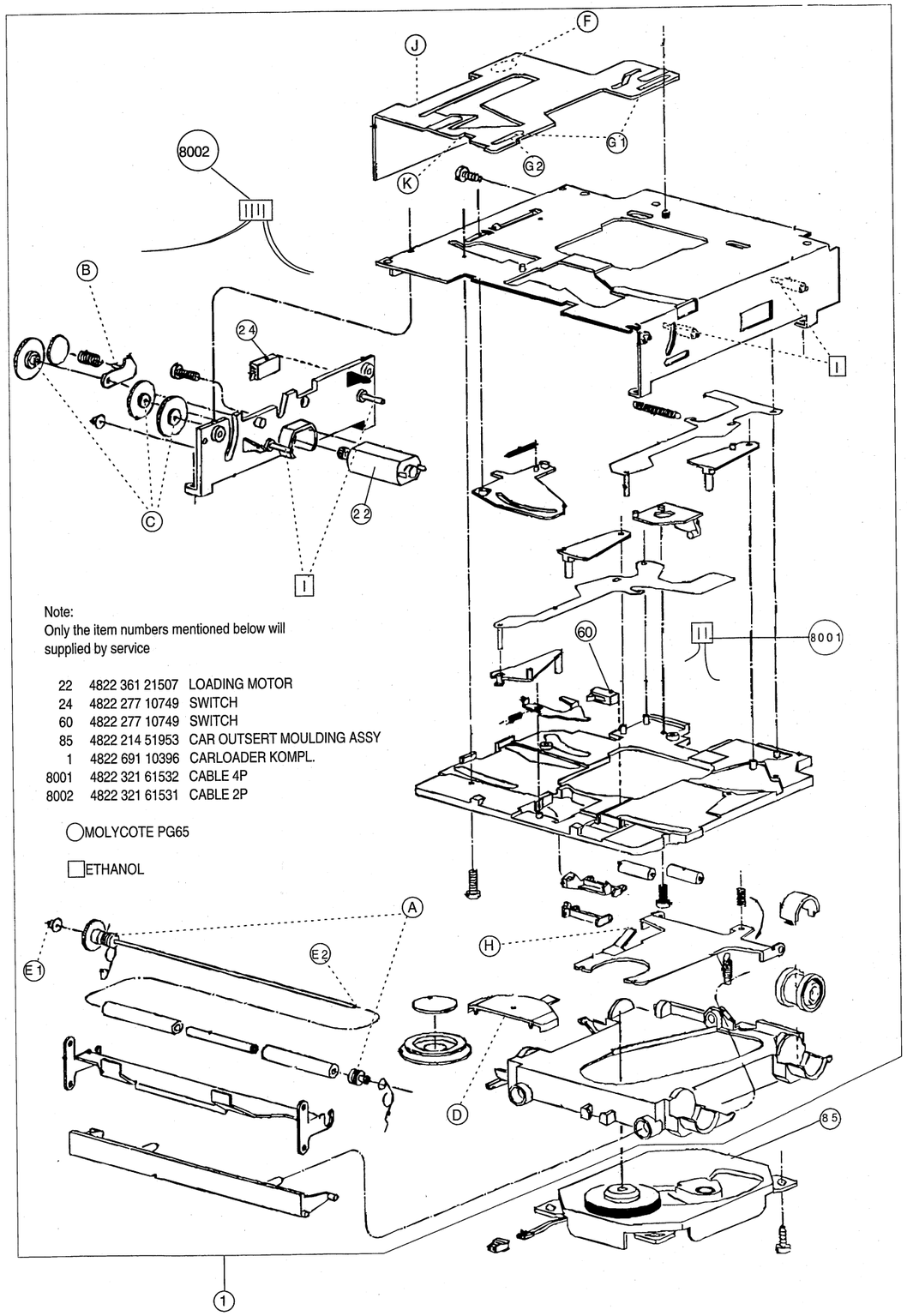

Note:
Only the item numbers mentioned below will supplied by service

22	4822 361 21507	LOADING MOTOR
24	4822 277 10749	SWITCH
60	4822 277 10749	SWITCH
85	4822 214 51953	CAR OUTSERT MOULDING ASSY
1	4822 691 10396	CARLOADER KOMPL.
8001	4822 321 61532	CABLE 4P
8002	4822 321 61531	CABLE 2P

◯ MOLYCOTE PG65

□ ETHANOL

Mechanical partslist

1	4822 502 11715	M 2,5X5 PAN>STZNBK
2	4822 502 30541	2,2X(PT/PAN+STZN
8 1 1	4822 529 10277	SHOCK ABSORBER
9 1 1	4822 529 10277	SHOCK ABSORBER
10 1 1	4822 529 10277	SHOCK ABSORBER
11 1 1	4822 529 10277	SHOCK ABSORBER
22 1 1	4822 361 21507	MOTOR ASSY
24 1 1	4822 277 10749	SWITCH MUTE
34 1 1	4822 502 12001	M 2 X 4PANZNBK
35 1 1	4822 502 12001	M 2 X 4PANZNBK
36 1 1	4822 502 12001	M 2 X 4PANZNBK
37 1 1	4822 502 12001	M 2 X 4PANZNBK
38 1 1	4822 502 12001	M 2 X 4PANZNBK
39 1 1	4822 502 12001	M 2 X 4PANZNBK
60 1 1	4822 277 10749	SWITCH MUTE
77 1 1	4822 502 12001	M 2 X 4PANZNBK
8001	4822 321 61531	CABLE, 2P
3 8001	4822 267 30871	CONNECTOR 2P.
8002	4822 321 61532	CABLE, 4P
5 8002	4822 267 40672	DISC 4POL.
81 1	4822 691 30275	MECH UNITCDM-9
8 81 1	4822 701 10425	M 2 X10T/PANZNBK
9 81 1	4822 701 10425	M 2 X10T/PANZNBK

LUBRICATING INSTRUCTIONS

Car loader

* A) The roller spindle (pos 28) : 2 x on diameter 2,5 mm.
(On the bearing points)

* B) The spindle of the swing bracke (all lenght).

* C) The spindles of the gearwheels (3 x all lenght).

* D) The pivot bearing of the pivot cover (pos 69)
(in the middle of the closing plate)

* E) E1The roller spindle on the top on diameter 1,2 mm
E2The metal pin on the motorplate assy (pos 15)
(Diameter 1,2 mm).

* F) The sliding surface on the top control bracket (pos 73)
in which the plastic pen of the motorplate assy is guiding.

* G) G1The guiding grooves (2 x) on the control bracket in
which the guide pins of the chassis are guiding.
G2The tag on the control bracket which actuate the switch brackets.

* H) The tag on the pressure plate (pos 66).

\# I) The suspension pins (2 x) of the chassis.
The suspension pins (2 x) of the motorplate assy.

* J) The teeth of the control bracket.

* K) On the control bracket the sliding surface of the detection bracket.

* MOLYCOTE PG 65/Q5-7565 code nr. 1304 501 0841

\# ETHANOL code nr. 1322 506 35201

Capacitors

2000	5322 122 32654	22NF10%X7R 63V
2001	5322 122 32654	22NF10%X7R 63V
2002	5322 122 32268	470PF 10% 50V
2003	4822 122 31746	1000PF 2%NP0 63V
2004	4822 122 32916	220NF10%X7R 63V
2005	4822 124 22646	47UF20% 16V
2006	4822 122 33584	220PF 5%
2007	4822 122 32916	220NF10%X7R 63V
2008	4822 122 33584	220PF 5%
2009	4822 121 51436	820NF10% 63V
2010	5322 122 33816	2200PF 2%NP0 63V
2011	4822 122 32542	47NF10%X7R 63V
2012	5322 122 32531	100PF 5%NP0 50V
2013	4822 122 33177	10NF 20% X7R 50V
2014	4822 122 31746	1000PF 2%NP0 63V
2015	4822 126 12104	12NF 5%
2016	5322 122 32654	22NF10%X7R 63V
2017	4822 126 12106	220NF 5%
2018	5322 122 32654	22NF10%X7R 63V
2019	4822 122 33177	10NF 20% X7R 50V
2020	4822 122 32916	220NF10%X7R 63V
2100	4822 122 32916	220NF10%X7R 63V
2101	4822 121 51361	5,6NF 2% 160V
2102	4822 121 51051	4.7NF 1% 160V
2103	4822 121 51262	910PF 1% 400V
2104	4822 124 22646	47UF20% 16V
2105	4822 126 12105	33NF 5%
2106	4822 122 32916	220NF10%X7R 63V
2107	4822 122 32916	220NF10%X7R 63V
2108	5322 122 32654	22NF10%X7R 63V
2109	5322 122 32654	22NF10%X7R 63V
2110	4822 122 32916	220NF10%X7R 63V
2111	4822 122 32916	220NF10%X7R 63V
2112	4822 122 33177	10NF 20% X7R 50V
2113	4822 122 32916	220NF10%X7R 63V
2114	4822 122 32916	220NF10%X7R 63V
2200	5322 122 32654	22NF10%X7R 63V
2201	4822 122 32916	220NF10%X7R 63V
2202	5322 122 32452	47PF 5%NP0 63V
2203	5322 122 32452	47PF 5%NP0 63V
2300	5322 122 33816	2200PF 2%NP0 63V
2301	5322 122 32452	47PF 5%NP0 63V
2302	4822 122 32916	220NF10%X7R 63V
2304	4822 122 33496	100NF10%X7R 63V
2305	4822 124 80453	100UF 20% 10V
2306	5322 122 32654	22NF10%X7R 63V
2307	4822 122 33584	220PF 5%
2308	4822 122 33496	100NF10%X7R 63V
2309	4822 124 23582	220UF 20% 10V
2311	4822 122 32916	220NF10%X7R 63V
2312	5322 122 32658	22PF 5% 50V
2313	5322 122 32658	22PF 5% 50V
2314	5322 122 32658	22PF 5% 50V
2315	4822 124 80109	0.22UF20% 50V
2316	5322 126 10223	4,7NF 5% XR7
2317	2222 580 16523	4,7NF 5% XR7
2320	4822 124 23582	220UF 20% 10V
2321	4822 122 33496	100NF10%X7R 63V
2322	4822 122 33496	100NF10%X7R 63V
2323	4822 122 33496	100NF10%X7R 63V
2324	4822 124 80453	100UF 20% 10V
2325	4822 124 22646	47UF20% 16V
2326	4822 122 32916	220NF10%X7R 63V
2327	4822 124 23279	22UF20% 16V
2328	5322 122 32654	22NF10%X7R 63V
2329	5322 122 32654	22NF10%X7R 63V
2331	4822 122 32916	220NF10%X7R 63V
2332	4822 124 11353	1UF 20% 16V
2333	5322 122 32268	470PF 10% 50V
2334	5322 122 32531	100PF 5%NP0 50V
2335	5322 122 32268	470PF 10% 50V
2336	5322 122 32531	100PF 5%NP0 50V
2337	4822 124 11353	1UF 20% 16V
2338	4822 122 33175	2,2NF 20% X7R 50V
2339	4822 122 33175	2,2NF 20% X7R 50V
2340	4822 122 33496	100NF10%X7R 63V
2341	4822 122 33496	100NF10%X7R 63V
2342	4822 122 33496	100NF10%X7R 63V
2400	4822 122 33496	100NF10%X7R 63V
2500	4822 122 33496	100NF10%X7R 63V
2501	4822 122 33496	100NF10%X7R 63V
2502	4822 122 33496	100NF10%X7R 63V
2600	4822 124 23282	1UF20% 50V
2601	4822 124 22646	47UF20% 16V
2602	5322 122 32654	22NF10%X7R 63V
2603	4822 124 22646	47UF20% 16V
2604	4822 124 22646	47UF20% 16V
2763	4822 124 23279	22UF20% 16V
2764	4822 124 23279	22UF20% 16V

Resistors

3000	4822 051 20472	4K70 5% 0,1W
3001	4822 051 20104	100K00 5% 0,1W
3002	4822 051 20229	22R00 5% 0,1W
3003	4822 051 20229	22R00 5% 0,1W
3004	4822 051 20101	100R00 5% 0,1W
3005	4822 051 51203	12K00 1% 0,125W
3006	4822 051 20101	100R00 5% 0,1W
3007	4822 051 20102	1K00 5% 0,1W
3008	4822 051 52403	24K00 1% 0,125W
3009	4822 051 53003	30K00 1% 0,125W
3010	4822 051 10222	2K20 2% 0,25W
3011	4822 051 20243	24K00 5% 0,1W
3012	4822 051 20224	220K00 5% 0,1W
3013	4822 051 20823	82K00 5% 0,1W
3014	4822 051 20478	4R70 5% 0,1W
3015	4822 051 20912	9K10 5% 0,1W
3016	4822 051 20229	22R00 5% 0,1W
3017	4822 051 51803	18K00 1% 0,125W
3018	4822 051 51203	12K00 1% 0,125W
3019	4822 051 20229	22R00 5% 0,1W
3020	4822 051 20243	24K00 5% 0,1W
3021	4822 051 20562	5K60 5% 0,1W
3022	4822 051 20223	22K00 5% 0,1W
3100	4822 051 10228	2R20 5% 0,25W
3101	4822 116 83634	5K6 0,25% 0.25W
3102	4822 050 22208	2R20 1% 0,6W
3103	4822 116 83634	5K6 0,25% 0.25W
3104	4822 051 10829	82R00 2% 0,25W
3105	4822 116 83634	5K6 0,25% 0.25W
3106	4822 051 20229	22R00 5% 0,1W
3107	4822 116 83634	5K6 0,25% 0.25W
3108	4822 051 20154	150K00 5% 0,1W
3109	4822 051 51803	18K00 1% 0,125W
3110	4822 051 51302	1K30 1% 0,125W
3111	4822 051 20512	5K10 5% 0,1W
3112	4822 051 20224	220K00 5% 0,1W
3113	4822 051 20223	22K00 5% 0,1W
3114	4822 051 54703	47K00 1% 0,125W
3115	4822 051 51803	18K00 1% 0,125W
3116	4822 051 20223	22K00 5% 0,1W
3117	4822 051 20473	47K00 5% 0,1W
3118	4822 051 20222	2K20 5% 0,1W
3119	4822 051 20332	3K30 5% 0,1W
3120	4822 051 20103	10K00 5% 0,1W
3200	4822 051 20223	22K00 5% 0,1W
3201	4822 051 20223	22K00 5% 0,1W
3202	4822 051 20223	22K00 5% 0,1W
3203	4822 051 20101	100R00 5% 0,1W
3204	4822 051 20224	220K00 5% 0,1W
3205	4822 051 20334	330K00 5% 0,1W
3206	4822 051 20104	100K00 5% 0,1W
3300	4822 051 20222	2K20 5% 0,1W
3301	4822 051 20223	22K00 5% 0,1W
3302	4822 051 20223	22K00 5% 0,1W
3303	4822 051 20478	4R70 5% 0,1W
3304	4822 051 20222	2K20 5% 0,1W
3305	4822 051 20008	0R00 5% 0,1W
3307	4822 051 10228	2R20 5% 0,25W
3311	4822 051 20224	220K00 5% 0,1W
3312	4822 051 20473	47K00 5% 0,1W
3313	4822 051 20182	1K80 5% 0,1W
3314	4822 051 20182	1K80 5% 0,1W
3319	4822 051 20229	22R00 5% 0,1W
3320	4822 051 20473	47K00 5% 0,1W
3321	4822 051 20104	100K00 5% 0,1W
3323	4822 051 53003	30K00 1% 0,125W
3324	4822 051 53003	30K00 1% 0,125W
3325	4822 051 20103	10K00 5% 0,1W
3326	4822 051 20104	100K00 5% 0,1W
3327	4822 051 20104	100K00 5% 0,1W
3328	4822 051 53003	30K00 1% 0,125W
3329	4822 051 53003	30K00 1% 0,125W
3330	4822 051 20102	1K00 5% 0,1W
3331	4822 051 20102	1K00 5% 0,1W
3332	4822 051 20229	22R00 5% 0,1W
3333	4822 051 20229	22R00 5% 0,1W
3400	4822 051 20154	150K00 5% 0,1W
3401	4822 051 10562	5K60 2% 0,25W
3402	4822 051 10682	6K80 2% 0,25W
3403	4822 051 10102	1K00 2% 0,25W
3404	4822 116 30426	4K7 3% 0.1W
3500	4822 051 20472	4K70 5% 0,1W
3501	4822 051 20102	1K00 5% 0,1W
3502	4822 051 20472	4K70 5% 0,1W
3503	4822 051 10008	0R00 5% 0,25W
3504	4822 051 20229	22R00 5% 0,1W
3505	4822 051 20229	22R00 5% 0,1W
3506	4822 051 20472	4K70 5% 0,1W
3507	4822 051 20472	4K70 5% 0,1W
3508	4822 051 20222	2K20 5% 0,1W
3509	4822 051 20562	5K60 5% 0,1W
3511	4822 051 20478	4R70 5% 0,1W
3512	4822 051 20102	1K00 5% 0,1W
3513	4822 051 20102	1K00 5% 0,1W
3514	4822 051 20334	330K00 5% 0,1W
3515	4822 051 20334	330K00 5% 0,1W
3516	4822 051 20102	1K00 5% 0,1W
3517	4822 051 20479	47R00 5% 0,1W
3600	4822 051 20122	1K20 5% 0,1W
3601	4822 051 20272	2K70 5% 0,1W
3602	4822 051 20472	4K70 5% 0,1W
3603	4822 051 10228	2R20 5% 0,25W
3604	4822 051 10228	2R20 5% 0,25W
3778	4822 051 20104	100K00 5% 0,1W
3779	4822 051 20479	47R00 5% 0,1W
3780	4822 051 20104	100K00 5% 0,1W
3799	4822 051 20479	47R00 5% 0,1W
4100	4822 051 20008	0R00 5% 0,1W
4200	4822 051 20008	0R00 5% 0,1W
4700	4822 051 20008	0R00 5% 0,1W
4701	4822 051 20008	0R00 5% 0,1W

Diods

6100	5322 130 31928	BAS16
6200	5322 130 31928	BAS16
6501	5322 130 34337	BAV99
6502	5322 130 34337	BAV99
6600	4822 130 33996	BZX84-C9V1
6601	5322 130 33671	BZX84-C6V2
6602	5322 130 34337	BAV99

IC's

7000	4822 209 31131	L272D
7001	4822 209 73234	TDA8808T/C3
7003	5322 130 61569	BC868
7100	4822 209 62059	TCA0372DP1
7101	4822 209 31973	TDA8809T/C2/S1/13
7102	4822 130 60511	BC847B
7103	5322 130 41983	BC858B
7200	4822 130 60511	BC847B
7201	4822 209 32153	MC68HC705C8CFN-CDM9V06
7202	5322 209 14481	HEF4053BT
7302	4822 209 30388	SAA7341GP
7303	4822 209 31553	HY6264ALJ-10
7304	4822 209 31131	L272D
7305	5322 130 41983	BC858B
7306	4822 209 30095	LM833D
7400	4822 209 30510	LM 2904D
7500	4822 209 31131	L272D
7600	4822 130 60511	BC847B
7602	4822 130 60511	BC847B

Miscellaneous

1001	4822 267 50838	14 PIN
1001	4822 214 52063	PCB CDM9-MOD-4
1020	4822 265 41209	12P
1030	4822 265 30957	4P
1040	4822 265 30956	2P
1050	4822 265 30958	2P
1200	4822 242 70831	CSA 4,00MG
1300	4822 242 81414	16,934MHZ
1002	4822 691 10366	
1 1002	4822 691 10396	CARLOADER
1003	4822 267 51146	12 PIN GOLD
2001	4822 122 33496	100NF 10% XR7 63V